NEW YORK UNIVERSITY
INSTITUTE OF MATHEMATICAL SCIENCES
LIBRARY
25 Waverly Place, New York 3, N. Y.

IMM-NYU 163

WAVES IN THE PRESENCE OF AN INCLINED BARRIER

by

Fritz John

Prepared under
Navy Contract N6ori-201 Task Order No. 1
By the
Institute for Mathematics and Mechanics
New York University

c. 1

November, 1947

INTRODUCTION

The present paper, prepared under Navy Contract N6ori-201, Task Order No. 1, is the third of the series announced in the report Waves Over Beaches of Small Slope, Under a Dock, Under an Overhanging Cliff, and Past Plane Barriers, (IMM-NYU 161). Beyond the solution of the specific problem indicated in the title it contains new observations and methods which may be interesting from the general point of view of mathematical analysis.

R. Courant

WAVES IN THE PRESENCE OF AN INCLINED BARRIER

By Fritz John

The present paper deals with the motion of water of infinite depth in the presence of a fixed barrier of length A which extends downwards from the surface and forms an angle $\frac{\pi}{2n}$ with the horizontal direction where n is a positive integer. For the case of a

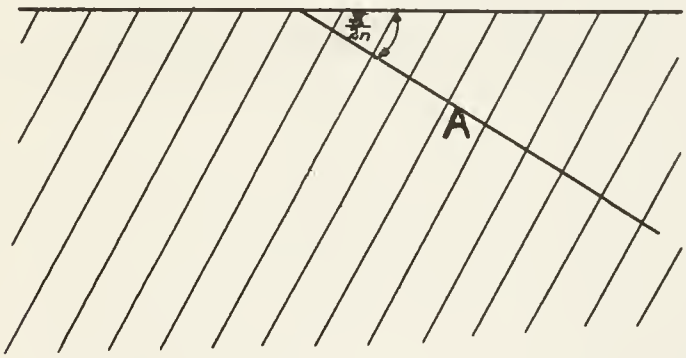

vertical barrier (n = 1) the motion was determined by F. Ursell [1]. That author obtains his solution by superposition of exponential solutions, arriving at an integral equation for the unknown function on the vertical line containing the barrier. He succeeds in solving that integral equation explicitly and obtains a solution which is characterized by the fact that the velocity of the liquid becomes infinite only at the edge of the barrier.

The methods developed by J. J. Stoker and H. Lewy for determining waves on sloping beaches (see IMM-NYU 161*) will be seen to furnish a simpler, and

*Waves Over Beaches Of Small Slope, Under A Dock, Under An Overhanging Cliff, And Past Plane Barriers.

in some respects more complete solution even in the case $n = 1$ and can be extended readily to general n. By the use of complex functions the determination of the motion is reduced to the solution of an ordinary differential equation with constant coefficients instead of an integral equation. The rôle of the various physical assumptions in uniquely determining the solution is brought out clearly, and assumptions that have to be made in order to make Fourier integral transformations valid, are avoided.

The method permits us to find the most general solution with singularities of a prescribed nature. Thus we shall consider solutions that in addition to having infinite velocity at the edge of the barrier, have singularities of the source or sink type at the points where the free surface reaches the barrier. Following the example of J. J. Stoker [2] the occurrence of such singularities may be thought to correspond to the breaking of waves at the barrier with corresponding loss of energy to the liquid. Such breaking is likely to occur, where the barrier forms a small angle with the surface.

The motion of the liquid in the presence of a barrier of infinite length extending downwards from a point inside the liquid can be treated by the same general method. For $n = 1$ the problem has already been solved by Ursell [1]. The complex function method permits in fact to solve a great variety of problems for water waves explicitly. In a later paper the author will take up an application to the problem of determining the motion of floating bodies.

The solution of the problem concerned with plane barriers in the general case will be carried out here to the point where the problem is reduced to the

solution of a system of 5n-1 ordinary linear equations for parameters c_k on which the motion depends. The coefficients of these equations are certain transcendental functions of the length A of the barrier. It did not seem feasible to carry out the solution of these linear equations explicitly for general n.

In the case of a vertical barrier (n = 1) the solution of these linear equations, whose coefficients are now Bessel functions, is quite simple and is given here. The case of a barrier, forming a 45° angle with the surface (n = 2) has been carried out completely by E. Isaacson and B. Grossman. The results of their reduction are given in a section elsewhere. The coefficients here are again integrals of products of exponential and algebraic functions, and may be considered as generalizations of Bessel functions.

The author is greatly indebted to Professor J. J. Stoker, whose work forms the basis of the present investigation, and whose advice during its progress, particularly relating to the physical interpretation of the results, has been indispensable. The results and notations of the preceding report IMM-NYU 161 will be constantly referred to in the course of this paper.

1. Method for finding the general solution.

We adopt the notation of the IMM-NYU report number 161 and use the dimensionless variables introduced there in (2.17), which again will be denoted simply by x,y,t. In those variables the barrier extends from the origin to the point (x_1, y_1), where

$$x_1 = a \cos \frac{\pi}{2n}, \quad y = -a \sin \frac{\pi}{2n} . \tag{1.1}$$

Here

$$a = mA = \frac{\sigma}{\sqrt{g}} A \tag{1.2}$$

where A is the length of the barrier and σ the circular frequency of the motion in the original variables.

The velocity potential $\Phi(x,y,t)$ is a potential function defined in the region Γ bounded by the x-axis and the barrier. Besides satisfying the potential equation

$$\Phi_{xx} + \Phi_{yy} = 0 , \tag{1.3}$$

Φ is assumed to be simple harmonic in the time:

$$\Phi_{tt} + \Phi = 0 . \tag{1.4}$$

It is assumed that Φ and its first partial derivatives are continuous on the boundary of Γ, with the possible exception of the edge (x_1, y_1) of the barrier and at the points $(\pm 0, 0)$ where the free surface reaches the barrier. (In what follows these three points will be referred to as "corners" of Γ.)

On the free surface $y = 0$ the condition

$$(1.5) \qquad -\Phi + \Phi_y = 0$$

is imposed. Along the barrier the normal velocity shall vanish:

$$(1.6) \qquad \Phi_n = 0$$

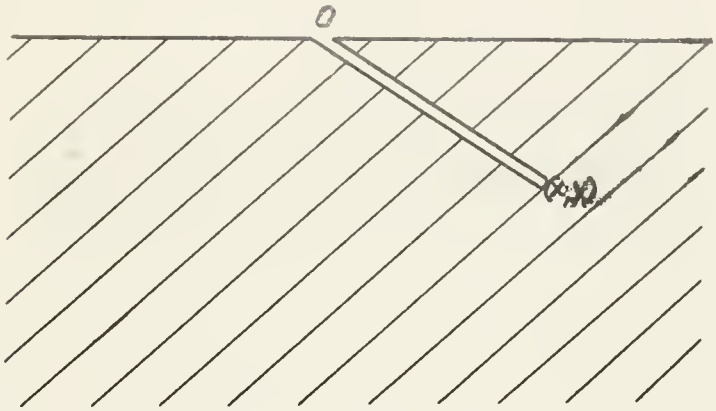

The motion still depends on the assumptions made on the behavior at infinity and at the three exceptional corner points. These assumptions will be expressed here as conditions on the velocity, which has direct physical meaning, instead of conditions for Φ itself.

It will be assumed that the components Φ_x and Φ_y stay bounded at infinity and tend towards 0, as $y \to \infty$.

At the two corners of Γ at the origin

$$(1.7) \qquad (x^2 + y^2)(\Phi_x^2 + \Phi_y^2)$$

shall stay bounded, and at the edge (x_1, y_1)

$$(1.8) \qquad \lim_{(x,y)\to(x_1,y_1)} ((x-x_1)^2 + (y-y_1)^2)(\Phi_x^2 + \Phi_y^2) = 0 .$$

Condition (1.4) implies that Φ is of the form

$$(1.8a) \qquad \Phi(x,y,t) = \varphi_1(x,y)\cos t + \varphi_2(x,y)\sin t \quad .$$

Here the $\varphi_k(x,y)$ are potential functions of x,y in satisfying the same regularity conditions and boundary conditions as Φ. Formula (1.8a) corresponds to a representation of Φ as the sum of two "standing waves". It is obvious that the potential functions φ_1 and φ_2 separately satisfy the boundary conditions (1.5), (1.6) and the assumptions on the behavior of Φ at infinity and at the singular points.

It will be shown that a potential function φ defined in Γ, that satisfies the free surface conditions (1.5) and for which φ_x and φ_y are bounded at infinity and vanish for $y \to -\infty$, is of the form

$$\varphi(x,y) = e^y(\alpha \cos x + \beta \sin x) + R$$

where R and its derivatives tend to 0 for $(x,y) \to \infty$. Here α, β are constant which may however be different for positive and negative x. Correspondingly $\Phi(x,y,t)$ for large positive x is asymptotically represented by an expression

$$e^y[A \cos(x+t) + B \sin(x+t) + C \cos(x-t) + D \sin(x-t)]$$

and for large negative x by an expression

$$e^y[A'\cos(x+t) + B'\sin(x+t) + C'\cos(x-t) + D'\sin(x-t)] \ .$$

Thus Φ can be considered approximately for large $|x|$ as a sum of two progressing waves.

The values of A,B,C,D,A',B',C',D' are not independent from each other but are linked together with the singularities of Φ through the energy integral. We have indeed the following theorem:

If Φ satisfies conditions (1.3), (1.5), (1.6) and if

$$\iint (\Phi_x^2 + \Phi_y^2)\,dxdy$$

exists over any finite subregion of Γ, then the values of A,B,C',D', already uniquely determine C,D,A',D'. That is, the incoming waves uniquely determine the outgoing waves at infinity if no sources or sinks of energy exist in Γ.

For the proof of this statement it is sufficient to consider the case where A,B,C',D' vanish. Consider the slit rectangular region γ, whose boundary b consists of the vertical line segments $x = x_1$, $x = x_2$, the horizontal line segment $y = y_0$, the free

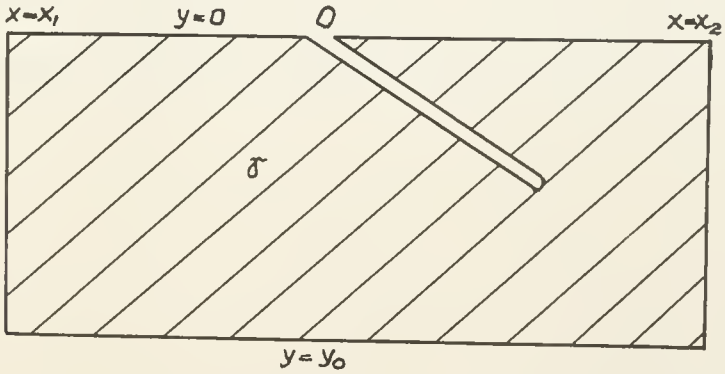

surface and the barrier. The expression

$$I = \frac{1}{2}\iint(\Phi_x^2 + \Phi_y^2)dxdy + \frac{1}{2}\int_{\substack{x_1\\ y=0}}^{x_2} \Phi_t^2\, dx$$

suggests itself as the total amount of energy contained in γ, in view of the fact that Φ_t represents the surface elevation in the units chosen here. We have

$$\frac{dI}{dt} = \iint_\gamma (\Phi_x\,\Phi_{xt} + \Phi_y\,\Phi_{yt})dxdy + \int_{\substack{x_1\\ y=0}}^{x_2} \Phi_t\,\Phi_{tt}\, dx$$

$$= \int_b \Phi_t \frac{\partial\Phi}{\partial n}\, ds + \int_{\substack{x_1\\ y=0}}^{x_2} \Phi_t\,\Phi_{tt}\, dx$$

$$= \int_{\substack{y_o\\ x=x_2}}^{o} \Phi_t\,\Phi_x\, dy - \int_{\substack{y_o\\ x=x_1}}^{o} \Phi_t\,\Phi_x\, dy + \int_{\substack{x_1\\ y=0}}^{x_2} (\Phi_y + \Phi_{tt})dx\,.$$

Here the last integral vanishes because of (1.4); for large positive x_1 and large negative x_2 the first two integrals become

$$-(1-e^{y_o})[(C\sin(x_2-t)-D\cos(x_2-t))^2+(A'\sin(x_1+t)-B'\cos(x_1+t))^2]+\varepsilon$$

where the error ε involved tends to 0 as $x_1 \to -\infty$, $x_2 \to +\infty$. Then, as I is obviously a periodic function of t, as Φ is periodic,

$$0 = I(2\pi) - I(0) = \int_0^{2\pi} \frac{dI}{dt}\, dt$$

$$= \pi[A'^2 + B'^2 + C^2 + D^2] + \int_0^{2\pi} \varepsilon\, dt \,.$$

As ε is arbitrarily small for a suitable choice of x_1, x_2, it follows that A', B', C, D vanish.

At the end of this paper it will be proved that a solution φ which tends to 0 for $x \to \infty$ and $x \to -\infty$, has to vanish everywhere. It then follows that the motion of the water in the presence of the barrier is uniquely determined by waves coming in from infinity on either side, as long as no "logarithmic" or higher singularities are present. More generally the motion will be determined by the incoming waves and the "strength" of the energy sources and sinks at places where they exist.*

In accordance with the method outlined in the IMM-NYU report number 161 the above conditions for the $\varphi_k(x,y)$ are translated into conditions for the analytic function $\chi(z) = \chi(x + iy)$, whose real part is φ_k. χ is determined uniquely by φ_k except for an arbitrary pure imaginary constant. Then $\chi(z)$ is regular analytic in the interior points of Γ. $\chi'(z)$, and hence also $\chi(z)$, is continuous on the boundary of Γ with the possible exception of the origin and the point $a\varepsilon = x_1 + iy_1$, where we put

---

*This proof is comparatively involved and makes use of the special nature of the region Γ. It is plausible that an analagous theorem exists for the motion of a liquid in the presence of any type of obstacle.

(1.9) $$\varepsilon = e^{-\frac{\pi i}{2n}} \quad .$$

The assumptions made on the velocity guarantee that

(A1) $\chi'(z)$ is bounded as $z \to \infty$ in Γ and that

$$\lim_{y \to -\infty} \chi'(x + iy) = 0$$

(A2) that $z\,\chi'(z)$ is bounded, as $z \to 0$ in Γ and that

(A3) $(z - a\varepsilon)\,\chi'(z) \to 0$ as $z \to a\varepsilon$ in Γ .

The boundary conditions become, in accordance with the report mentioned above,

(1.10) $\mathrm{Im}(\frac{d}{dz} + i)\,\chi(z) = 0$ for real $z \neq 0$

(1.11) $\mathrm{Im}(\varepsilon\,\chi'(z)) = 0$ along both sides of the barrier, i.e. for $z = t\varepsilon$, where t is real between 0 and a.

The essential step in finding a function $\chi(z)$ satisfying all the conditions mentioned consists in reducing the two boundary conditions (1.10), (1.11) to identical form by introducing the auxiliary function

(1.12) $F(z) = D^n(D-\zeta_1)(D-\zeta_2)\ldots(D-\zeta_n)\,\chi(z) = L(D)\,\chi(z).$

Here D denotes the differential operator

$$D = \frac{d}{dz}$$

and the constants ζ_k are defined by

(1.13) $$\zeta_k = i\varepsilon^{-2k} = ie^{i\pi k/n} \quad .$$

We notice the following properties of the ζ_k, which are essential for all that follows:

(1.14) $$R(\zeta_k) \leqq 0 \quad \text{for} \quad k = 0,1,\ldots,n$$

(1.15) $$\zeta_n = -i \quad , \quad \zeta_o = i$$

(1.16) $$\overline{\zeta_k} = \zeta_{n-k}$$

(1.17) $$\overline{\varepsilon\zeta_k} = \varepsilon\zeta_{n-k+1} \quad .$$

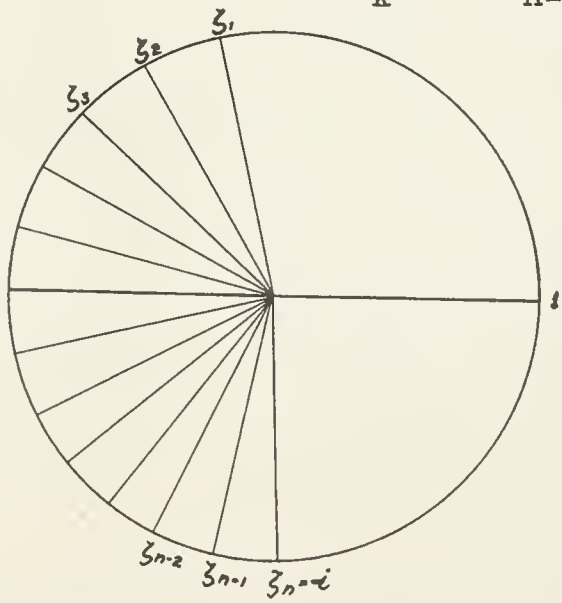

The symmetry conditions (1.16), (1.17) imply the following properties for the polynomial L(D):

(1.18) $$P(D) = \frac{L(D)}{D-\zeta_n} = D^n \prod_{k=1}^{n-1} (D-\zeta_k)$$

is a polynomial with real coefficients, as the roots are conjugate imaginary in pairs. Similarly

$$(1.19) \quad L(D) = -(\varepsilon D)^n \prod_{k=1}^{n} (\varepsilon D - \varepsilon\zeta_k) = Q(\varepsilon D) \cdot (\varepsilon D)$$

where Q is a polynomial with real coefficients.

As $\chi' + i\chi$ is real and continuous along the real axis, it is regular there as well. Then

$$(1.20) \qquad F(z) = P(D)\,(\chi' + i\chi)$$

is regular along the real axis and also real, as $P(D)$ is a polynomial with real coefficients. Similarly $\varepsilon\chi'$ is real and continuous along each side of the barrier, and hence regular there, though the values on one side will not be the analytic continuation of those on the other side. It follows again that

$$(1.21) \quad F(z) = Q(\varepsilon D)(\varepsilon\chi') = Q(\tfrac{d}{dt})(\varepsilon\chi'(\varepsilon t))$$

is regular and real along the barrier.

Thus the function $F(z)$ is real along the whole boundary of Γ, with possible singularities at $0, \infty, a\varepsilon$. It remains to discuss the behavior of F at those points. The function

$$(1.22) \qquad f(z) = (D + i)\,\chi(z)$$

being real along the real axis, can be continued across the axis by the formula

$$(1.23) \qquad f(\bar{z}) = \overline{f(z)}$$

and becomes regular in the region Γ^* formed by adding to Γ the points obtained by reflection with

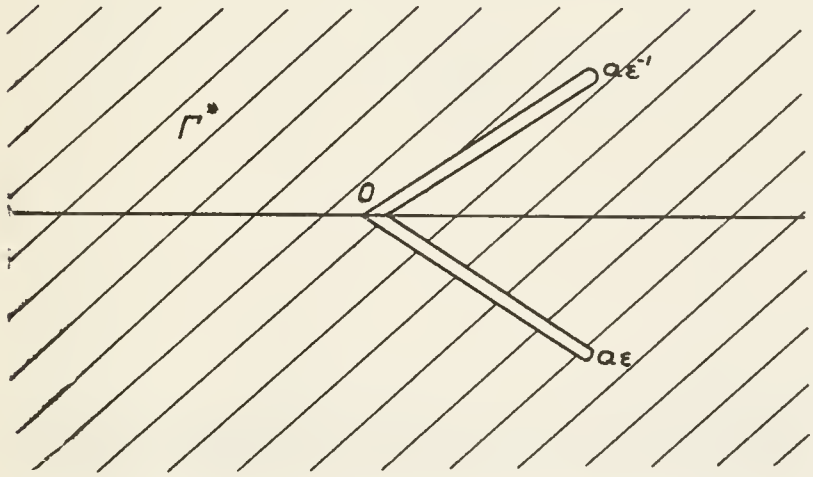

respect to the real axis. By assumption (A1) there exists a constant M such that

$$|\chi'(z)| < M$$

for large z in Γ. Then

$$|f(z)| = |\chi' + i\chi| < M|z| + C$$

for large z in Γ, and hence, because of (1.23), in a full neighborhood of infinity.* Thus f(z)/z is bounded at infinity, and hence regular there:

$$f(z) = d_{-1}z + d_o + d_1 z + d_2 z^{-2} + \dots \quad .$$

As χ' is bounded at infinity in Γ, it follows that in Γ

---

*This conclusion would have to be modified for the case of a submerged barrier extending to infinity.

$$\chi(z) = -id_{-1}z + (\text{bounded terms}) .$$

Now the assumption $\lim_{y \to -\infty} \chi'(x + iy) = 0$ implies that

$$\lim_{y \to -\infty} \frac{\chi(x+iy)}{x+iy} = 0 .$$

Hence we must have

$$d_{-1} = 0 .$$

The coefficients d_k in the expansion of f are real, as f is real along the real axis. By changing $\chi(z)$ by a suitable pure imaginary constant we can bring about that d_o vanishes. Then

$$(1.24) \qquad f(z) = (D+i)\chi = \sum_{k=1}^{\infty} d_k z^{-k} \quad \text{for } |z| > a .$$

It follows that $F(z) = P(D)\, f$ is of the form

$$(1.25) \qquad F(z) = \sum_{k=n+1}^{\infty} \alpha_k z^{-k} \quad \text{for } |z| > a$$

with real α_k, as P(D) is a real polynomial containing the factor D^n.

To study the behavior of F at the corners of Γ, we make the general remark that if g(z) is defined in a region γ whose boundary contains the origin, and if

$$|g(z)| \leqq \frac{M}{|z|} \qquad \text{in } \gamma$$

then by Cauchy's formula

$$|g^{(k)}(z)| \leqq \frac{k!\,M}{\rho^{k+1}}$$

in any point of γ that has a distance $\geqq \rho$ from the boundary of γ.

We now apply this argument to the right hand corner of Γ at the origin. We have from (A2)

$$\chi' = O(\tfrac{1}{z}) \text{ near } 0 \text{ in } \Gamma \quad .$$

Hence also

$$\chi(z) = O(\tfrac{1}{z}) \quad \text{and} \quad f = \chi' + i\chi = O(\tfrac{1}{z}) \ .$$

Then also from (1.23)

$$f = O(\tfrac{1}{z}) \text{ near } 0 \text{ in } \Gamma^* \quad .$$

It follows that

$$F(z) = P(D)f = O(\frac{1}{\rho^{2n}}) \quad ,$$

if ρ is the minimum distance of z from the boundary of Γ^*, i.e. from the rays

$$\arg z = \frac{\pi}{2n} \quad \text{and} \quad \arg z = -\frac{\pi}{2n} \ .$$

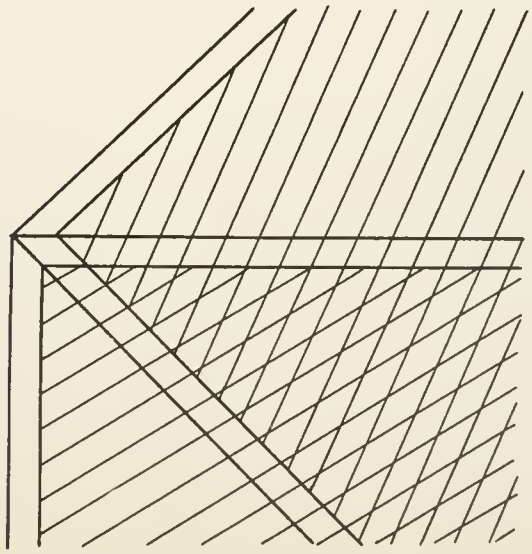

Similarly

$$\varepsilon\chi' = O(\frac{1}{z})$$

in the right hand corner of Γ and hence, if $\varepsilon\chi'$ is continued across the barrier, also in the sector

$$-\frac{2\pi}{2n} \leqq \arg z \leqq 0 \quad .$$

Then

$$F = Q(\varepsilon D) \quad \varepsilon\chi' = O(\frac{1}{\rho^{2n}})$$

for the points of that sector having a distance $\geqq \rho$ from the boundary. It follows that

$$F(z) = O(\frac{1}{\rho^{2n}})$$

for all points of Γ having a minimum distance $> \rho/\sin\frac{\pi}{2n}$ from the origin. Thus

$$z^{2n} F(z)$$

is bounded near the right hand corner of Γ. The same argument shows that F has the same behavior near the left hand corner. Furthermore, the same argument shows, in view of (A3), that

$$\lim_{z \to a\varepsilon} (z - a\varepsilon)^{2n} F(z) = 0 \ . \tag{1.26}$$

The actual determination of the function F will be achieved by mapping the region Γ of the

z-plane conformally into the sector T_o

$$0 < \arg w < \frac{\pi}{2n}$$

of the w-plane, by means of a function

$$z = K(w) \ . \tag{1.27}$$

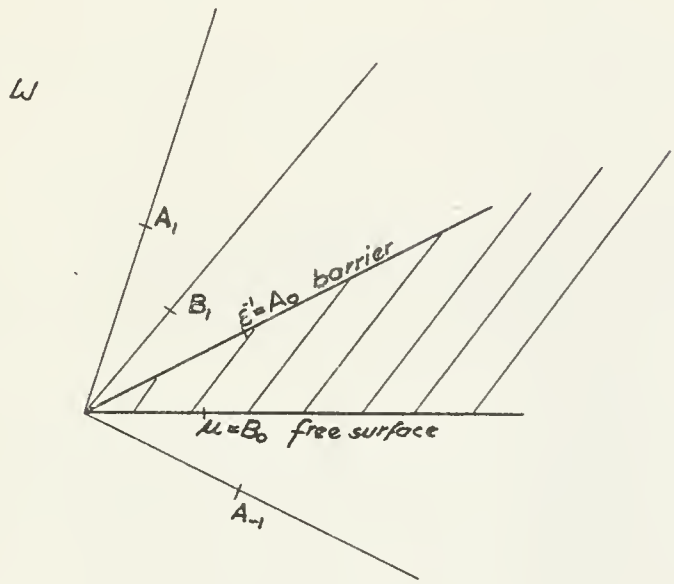

Here we can still prescribe arbitrarily the images of three boundary points. We postulate that:

$w = 0$ corresponds to $z = -0$ (left hand corner of Γ)

$w = \infty$ corresponds to $z = +0$ (right hand corner of Γ)

$w = \varepsilon^{-1}$ corresponds to $z = a\varepsilon$ (edge of barrier).

The free surface in the z-plane then goes over into the positive w-axis, the barrier into the ray $\arg w = \frac{\pi}{2n}$. The point $z = \infty$ goes over into some point μ on the positive real axis. From the change of angles at the vertices of Γ we conclude that

$$\text{near } w = 0: \quad K(w) \sim w^{2n-1}$$

$$\text{near } w = \infty: \quad K(w) \sim w^{-1}$$

$$\text{near } w = \varepsilon^{-1}: \quad K(w) - a\varepsilon \sim (w-\varepsilon^{-1})^2$$

$$\text{near } w = \mu: \quad K(w) \sim (w-\mu)^{-1} \quad .$$

By the mapping (1.27) $F(z)$ goes over into a function

$$G(w) = F(K(w)) \tag{1.28}$$

which is regular in T_o, and real on the boundary of T_o, with possible singularities at $w = 0, \infty, \varepsilon^{-1}$ and μ. The region T_o now has the special property that a function G, which is regular in T_o and real on its boundary, is univalued in the whole w-plane. $G(w)$ can be continued into the whole w-plane. Reflection on the lines $\arg w = \frac{\pi}{2n}$ and $\arg w = 0$ shows that

$$G(\varepsilon^2 w) = \overline{G(\bar{w})} = G(w) \quad .$$

Consequently G is a univalued function of w^{2n}. The only possible singularities of $G(w)$ in the whole plane are the points

$$w = 0$$

$$w = \infty$$

$$w = A_r = \varepsilon^{-1-2r}$$

$$w = B_r = \varepsilon^{-2r}\mu$$

which must be isolated singularities and not branchpoints. As $z^{2n} F(z)$ was seen to be bounded near the origin of the z-plane, the function $G(w)$ can only have a pole of order $2n(2n-1)$ at $w = 0$ and a pole of order $2n$ at $w = \infty$. Because of (1.26) $G(w)$ can only have a pole of order $< 4n$ at $w = \epsilon^{-1}$ and hence at any point A_r. Because of (1.25) $F(z)$ has a zero of order $n + 1$ at $z = \infty$, and hence $G(w)$ has a zero of order $n + 1$ at $w = \mu$, and hence at all B_r. As $G(w)$ has poles as only singularities, it must be a rational function. As G depends only on w^{2n}, it must be of the form

$$(1.29) \qquad G(w) = \frac{[w^{2n} - \mu^{2n}]^{n+1}}{w^{2n(2n-1)}(1+w^{2n})^{4n-1}} \sum_{k=0}^{5n-2} c_k w^{2nk}$$

where the coefficients c_k are real, as G is real for positive real v.

The mapping function $K(w)$ is easily determined. The expression $z.w = wK(w)$ is obviously real on the boundary of T_o. Thus $wK(w)$ is a univalued function of w for all w, depending on w^{2n} alone. In addition K has a zero of order $2n-1$ for $w = 0$, a pole of order 1 at μ and hence at every B_k, and has a simple zero at $w = \infty$. Consequently K is of the form

$$K(w) = \frac{Cw^{2n-1}}{w^{2n} - \mu^{2n}}$$

with a constant C. This constant is determined by the condition that $K(\epsilon^{-1}) = a\epsilon$:

$$C = a(1 + \mu^{2n}) .$$

Finally the constant μ is now seen from the condition

$$K'(\varepsilon^{-1}) = 0$$

to have the value

$$\mu = (2n-1)^{-\frac{1}{2n}} \quad . \tag{1.30}$$

Thus the mapping is given by

$$z = K(w) = \frac{2naw^{2n-1}}{(2n-1)w^{2n}-1} \quad . \tag{1.31}$$

Thus F is of the form (1.29) with μ given by (1.30), and w and z being connected by the algebraic relation (1.31). F is seen to depend on 5n-2 constants c_k. The exact determination of F and hence of χ then only requires a closer analysis of the resulting expression, and the derivation of the conditions imposed on the c_k by the original assumptions on χ. We will first carry out this analysis in detail for the case of a vertical barrier (n = 1), and less completely for the general case in the next sections.

2. <u>The case of a vertical barrier.</u>

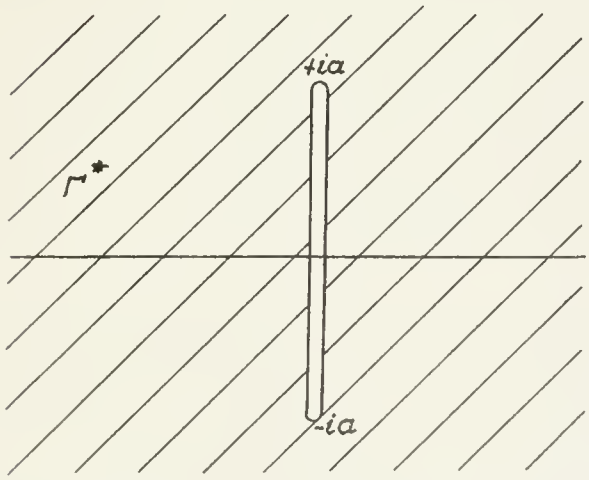

In the case n = 1 formula (1.12) reduces to

$$F(z) = D(D + i)\ \chi(z)\ . \tag{2.1}$$

The function F is regular in the region Γ^* consisting of the z-plane slit from -ia to +ia. F is real along the real axis and along both sides of the slit. The mapping function K becomes here according to (1.31)

$$z = \frac{2aw}{w^2-1} = K(w)\ . \tag{2.2}$$

This function maps the first quadrant T_0 of the w-plane on Γ, and the right half of the w-plane on Γ^*. Solving for w we get for z in Γ^*

$$w = \frac{a+\sqrt{a^2+z^2}}{z} \tag{2.3}$$

where $\sqrt{a^2+z^2}$ denotes that branch regular in Γ^* that behaves like z at infinity.

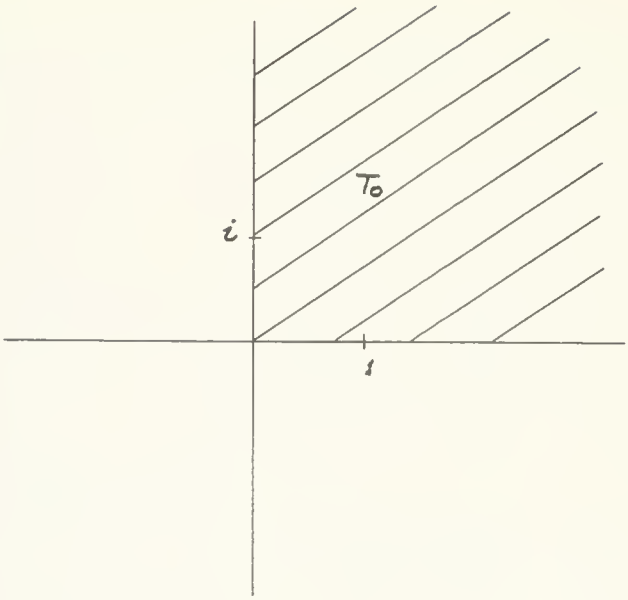

The function G(w) becomes here

$$(2.4) \qquad G(w) = \frac{(w^2-1)^2}{w^2(1+w^2)^3}\,(c_0 + c_1 w^2 + c_2 w^4 + c_3 w^6)\ .$$

Now from (1.11) $i\,\chi'(z)$ is real along the barrier, and hence, as a function of w, is real along the positive imaginary w-axis. As by assumption (A3)

$$\lim_{z \to -ia} (z + ia)\, i\,\chi'(z) = 0$$

it follows that $i\,\chi'$ as a function of w has at most a pole of order 1 at the point $w = i$. Then

$$i\,\chi' = \frac{\alpha}{w-i} + (\text{regular function of } w-i)\ .$$

Consequently

$$G(w)\,\frac{dz}{dw} = -G\,\frac{2a(w^2+1)}{(w^2-1)^2} = \frac{dz}{dw}\left(\frac{d}{dz} + i\right)\chi'$$

(2.4a)
$$= \frac{d}{dw}\,\chi' + i\,\chi'\,\frac{dz}{dw}$$

$$= \frac{\alpha i}{(w-i)^2} + (\text{regular function of } w-i)\ .$$

Thus the residue of the function

$$G(w)\,\frac{dz}{dw} = -\frac{2a}{w^2(1+w^2)^2}\,(c_o + c_1w^2 + c_2w^4 + c_3w^6)$$

at the point $w = i$ must vanish. Consequently we get the condition

(2.5)
$$3c_o - c_1 - c_2 + 3c_3 = 0\ .$$

Substituting the expression (2.3) for w into (2.4) we obtain

$$F(z) = \frac{a^2}{2z^2}\left[(c_o+c_1+c_2+c_3) + \frac{a(-3c_o-c_1+c_2+3c_3)}{\sqrt{a^2+z^2}}\right.$$

$$\left. + \frac{a^2(3c_o-c_1-c_2+3c_3)}{a^2+z^2} + \frac{a^3(-c_o+c_1-c_2+c_3)}{\sqrt{a^2+z^2}\;3}\right]\ .$$

With the help of (2.5) this expression may be written

(2.6)
$$F(z) = \frac{2c_oa^2(\sqrt{z^2+a^2}-a)}{z^2\sqrt{z^2+a^2}} + \frac{2c_3a^2(\sqrt{z^2+a^2}+a)}{z^2\sqrt{z^2+a^2}}$$

$$+ \frac{a^3(-c_o+c_2-2c_3)}{\sqrt{z^2+a^2}\;3}\ .$$

Having determined F, the function $\chi(z)$ is a solution of the differential equation (2.1). The general solution of that equation can be written

$$\chi(z) = [D(D+i)]^{-1} F = -i[D^{-1} - (D+i)^{-1}]F$$

$$= -i\left(\int_{z_0}^{z} F(\eta)d\eta + \alpha\right) + ie^{-iz}\left(\int_{z_0}^{z} e^{i\eta} F(\eta)d\eta + \beta\right)$$

with arbitrary complex constants α, β, z_0. As $F(\eta)$ behaves like η^{-2} at infinity, the integrals converge, if we choose $z_0 = -\infty$, and prescribe that the path of integration shall lie in Γ and shall approach $-\infty$ along the negative real axis. Then

$$\chi'(z) = e^{-iz}\left[\int_{-\infty}^{z} e^{i\eta} F(\eta)d\eta + \beta\right] \tag{2.7}$$

$$\chi' + i\chi = \int_{-\infty}^{z} F(\eta)d\eta + \alpha \ . \tag{2.8}$$

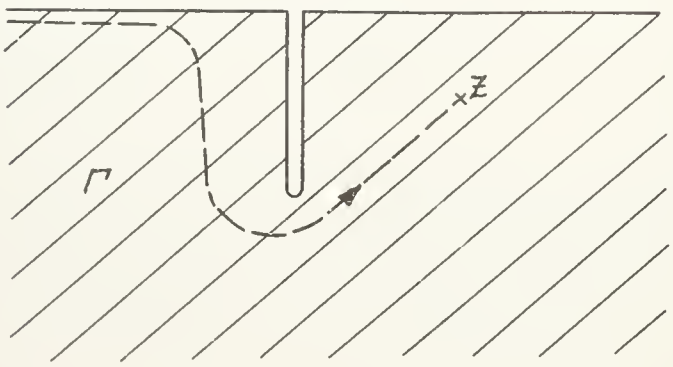

According to (1.24) $\chi' + i\chi$ must vanish at infinity. This implies obviously

$$\alpha = 0 \ . \tag{2.9}$$

In view of the fact that $F(\eta) = O(\frac{1}{\eta^2})$, the condition (2.9) is also sufficient to guarantee that $\chi' + i\chi$ is real along the real axis and vanishes at infinity.

From the lemma that will be proved below (see p. 45) it follows that the expression χ' given by (2.7) satisfies in Γ for large z

$$\chi' = O(e^{-iz}) + O(\frac{1}{z}) \ .$$

Hence the velocity is bounded at infinity and vanishes for $y \to -\infty$. The only condition that remains to be checked is the reality of $i\chi'$ at the barrier.

As e^{-iz} is real on the barrier, we must have

$$R[\int_{-\infty}^{z} e^{i\eta} F(\eta) d\eta + \beta] = 0 \tag{2.10}$$

for z on the barrier on either side.

We consider a point $z = it$ with $-a < t < 0$ on the left hand border of the barrier. The lower limit in the integral in (2.10) may be replaced by $+i\infty$, as long as the path of integration does not cross the positive real axis. Applying integration by parts and omitting terms with vanishing real parts we find from (2.10), (2.6)

$$R(\beta) = R(i \int_{+i\infty}^{it} e^{i\eta} [- \frac{4c_o a^2}{\eta} + 2(c_o - c_3)\, a \frac{\sqrt{\eta^2+a^2}+a}{\eta}$$

$$+ \frac{a(-c_o+c_2-2c_3)\eta}{\sqrt{\eta^2+a^2}\; 3}]\, d\eta\,)$$

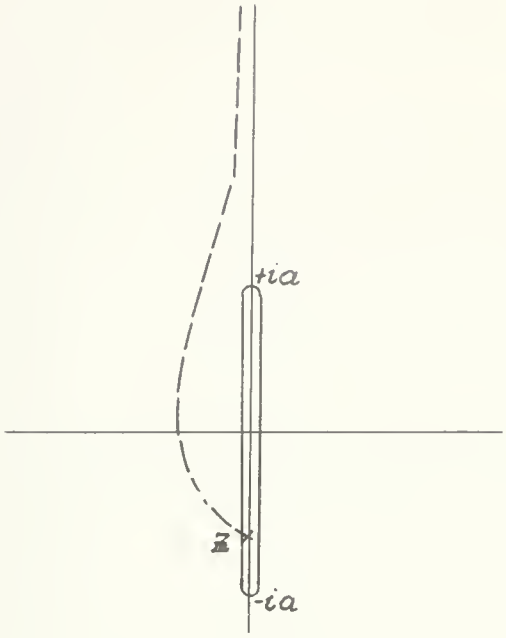

Here the only contribution to

$$R(i \int_{+i\infty}^{it} e^{i\eta}\, \eta^{-1}\, d\eta\,)$$

arises from the origin, which contributes the value $-\pi$. The remaining terms of the integrand are integrable along the imaginary axis. Taking the path of integration along that axis we notice that the only contributions arise from the points between +ia and $i\infty$, and only from the terms containing a radical. Substituting $\eta = i\zeta\, a$ we finally obtain

$$R(\beta) = 4\pi c_o a^2 + 2(c_o - c_3)a^2 \int_1^\infty e^{-a\zeta} \frac{\sqrt{\zeta^2-1}}{\zeta} d\zeta$$

(2.11)
$$+ a^2(-c_o + c_2 - 2c_3) \int_1^\infty e^{-a\zeta} \frac{\zeta}{\sqrt{\zeta^2-1}} d\zeta \quad .$$

The integrals occurring in (2.11) can be expressed in terms of Bessel functions K_n of the second kind.* We have indeed

(2.12) $$S_1(a) = \pi + \int_1^\infty e^{-a\zeta} \frac{\sqrt{\zeta^2-1}}{\zeta} d\zeta = \frac{\pi}{2} + K_1(a)$$

$$+ \int_o^a K_o(b)db$$

(2.13) $$S_2(a) = \int_1^\infty e^{-a\zeta} \frac{\zeta}{\sqrt{\zeta^2-1}} d\zeta = K_1(a) \quad .$$

In this notation

(2.14) $$R(\beta) = 2\pi a^2(c_o + c_3) + 2(c_o - c_3)a^2 S_1(a)$$

$$+ (-c_o + c_2 - 2c_3)a^2 S_2(a) \quad .$$

This condition then is equivalent to reality of $i\chi'$ on the left hand side of the barrier. The reality of $i\chi'$ on the right hand side is then satisfied as well as a consequence of relation (2.5).

---

*See Whittaker and Watson: "Modern Analysis", p. 384.

Indeed $G(w)K'(w)$ was seen to be of the form (2.4a) near $w = i$. As $K'(i) = 0$, the expansion of $e^{iK(v)}$ in terms of $(v-i)$ contains no first order term. Then the function

$$e^{iK(v)} G(v)K'(v)$$

has residue 0 at $v = i$. Then the expression

$$\beta + \int_{-\infty}^{z} e^{i\eta} F(\eta)d\eta = \beta + \int_{1}^{w} e^{iK(v)} G(v)K'(v)dv$$

has no branchpoint for $w = i$. Hence, if this expression is pure imaginary for z on the left hand border of the barrier, i.e. for pure imaginary w between 0 and $+i$, then it is pure imaginary for all w on the positive imaginary axis.

$$\lim_{z \to -\infty} [\chi(z) - i\beta e^{-iz}] = 0 . \tag{2.15}$$

To investigate the behavior of $\chi(z)$ for $z \to +\infty$ we make use of the lemma to be proved below (see p. 45). We obtain that

$$\lim_{z \to +\infty} [\chi(z) - i(\beta + C)e^{-iz}] = 0 \tag{2.16}$$

where

$$C = \oint e^{i\eta} F(\eta)\, d\eta \tag{2.17}$$

the integral being extended over a closed path including the slit from $-ia$ to $+ia$. It is permissible

to obtain the asymptotic behavior of the derivatives of χ (z) by differentiation of the formulae (2.14), (2.13).

We have then the result that the most general function χ (z) satisfying our conditions is representable in the form (2.5a), where F(z) is given by (2.5) with arbitrary real constants c_o, c_2, c_3, and where $z_o = -\infty$, $\alpha = 0$, and β is subject to the condition (2.11). The behavior of this solution at infinity is then determined by relations (2.13), (2.14).

Integrating by parts in (2.7) we obtain

$$C = -i \oint e^{i\eta} \left[-2a^2(c_o+c_3) \frac{1}{\eta} + 2a(c_o-c_3) \frac{\sqrt{\eta^2+a^2}}{\eta} \right.$$

$$\left. + a(-c_o+c_2-2c_3) \frac{\eta}{\sqrt{\eta^2+a^2}} \right] d\eta$$

$$= -4\pi a^2(c_o+c_3) - 2ai(c_o-c_3) \oint (e^{i\eta}-1) \frac{\sqrt{\eta^2+a^2}}{\eta} d\eta$$

$$- a(-c_o+c_2-2c_3)i \oint e^{i\eta} \frac{\eta}{\sqrt{\eta^2+a^2}} d\eta$$

as

$$\oint \frac{\sqrt{\eta^2+a^2}}{\eta} d\eta = 0 .$$

The path in the remaining integrals can be contracted into the slit from -ia to +ia, and we obtain for $\eta = ia\zeta$, in analogy to (2.14)

$$(2.18)\quad C = -4\pi a^2(c_o+c_3)-4a^2 i(c_o-c_3)T_1(a)-2ia^2(-c_o+c_2-2c_3)T_2(a).$$

Here we put

$$(2.19)\quad \begin{aligned} T_1(a) &= \int_{-1}^{1}(e^{-a\zeta}-1)\frac{\sqrt{1-\zeta^2}}{\zeta}\,d\zeta = -\pi i J_1(ia)-\pi\int_o^a J_o(ib)db \\ T_2(a) &= \int_{-1}^{1} e^{-a\zeta}\frac{\zeta}{\sqrt{1-\zeta^2}}\,d\zeta = \pi i J_1(ia) \quad . \end{aligned}$$

The general solution $\chi(z)$ is seen to depend on four real constants c_o, c_2, c_3 and $\mathrm{Im}(\beta)$. It is convenient for purposes of discussion to break up the solution into four "fundamental" solutions, each with simple characteristic properties. We write

$$(2.20)\quad \begin{aligned} \chi(z) = \mathrm{Im}(\beta)\,\chi_o(z) &+ 4a^2c_3\,\chi_1(z) + 4a^2c_o\,\chi_2(z) \\ &+ 2a^2(c_o-c_2+2c_3)\,\chi_3(z) \ . \end{aligned}$$

Here each fundamental solution $\chi_i(z)$ is characterized by its values of $\mathrm{Im}(\beta), c_o, c_2, c_3$ as follows:

$$\begin{aligned} &\chi_o(z): \ \mathrm{Im}(\beta) = 1 \ , \ c_o = c_2 = c_3 = 0 \\ &\chi_1(z): \ \mathrm{Im}(\beta) = 0 \ , \ c_o = 0,\ c_2 = \frac{1}{2a^2}\ ,\ c_3 = \frac{1}{4a^2} \\ &\chi_2(z): \ \mathrm{Im}(\beta) = 0 \ , \ c_o = \frac{1}{4a^2},\ c_2 = \frac{1}{4a^2},\ c_3 = 0 \\ &\chi_3(z): \ \mathrm{Im}(\beta) = 0 \ , \ c_o = 0,\ c_2 = -\frac{1}{2a^2},\ c_3 = 0 \ . \end{aligned}$$

Corresponding to (2.20) $\varphi(x,y) = R(\chi(z))$ can be written as a combination of four "fundamental" potential functions $\varphi_i(x,y)$, which are the real parts of the $\chi_i(z)$. The definitions and characteristic properties of these functions are summarized on p. 32. The general velocity potential as a function of x,y,t can then be written in dimensionless variables as a linear combination of the φ_k as follows

$$(2.21) \quad \Phi(x,y,t) = \sum_{k=0}^{3} (\alpha_k \cos t + \beta_k \sin t)\, \varphi_k(x,y)$$

with constants α_k, β_k. We now try to determine the constants in such a way that the resulting motion corresponds to that caused by a progressing wave arriving from $x = -\infty$. It is plausible that this wave will be partly reflected by the barrier, and partly transmitted to $x = +\infty$ in such a way that no "breaking" of waves occurs on the right hand side of the barrier and no wave progressing to the left exists at $x = +\infty$.

The absence of breaking waves on the right hand side of the barrier corresponds to the assumption

$$\alpha_1 = \beta_1 = 0$$

as the term with φ_1 is the only one furnishing a logarithmic singularity there.

For large negative x and y = 0 the function φ is represented asymptotically by an expression of the form

$$(2.22) \quad A \cos(x+t) + B \sin(x+t) + C \cos(x-t) + D \sin(x-t)$$

Fundamental Velocity Potentials for Standing Waves in the Presence of a Vertical Barrier

$$\varphi_i(x,y) = R[-i\int_{-\infty}^{z} F(\eta)d\eta + ie^{-iz}(\int_{-\infty}^{z} e^{i\eta} F(\eta)d\eta + \beta)]$$

	F	β	Unbounded terms of φ at		Velocity at edge (0,-a)	Asymptotic expression for φ at	
			(+0,0)	(-0,0)		$x = -\infty$	$x = +\infty$
φ_0	0	i	0	0	finite	$-e^y \cos x$	$-e^y \cos x$
φ_1	$\frac{\sqrt{z^2+a^2}+a}{2z^2\sqrt{z^2+a^2}}$	$\frac{1}{2}(\pi-S_1)$	$\log\sqrt{x^2+y^2}$	0	finite	$\frac{1}{2}(\pi-S_1)e^y \sin x$	$e^y[\frac{1}{2}(-\pi-S_1) \sin x - T_1 \cos x]$
φ_2	$\frac{\sqrt{z^2+a^2}-a}{2z^2\sqrt{z^2+a^2}}$	$\frac{1}{2}(\pi+S_1)$	0	$\log\sqrt{x^2+y^2}$	finite	$\frac{1}{2}(\pi+S_1)e^y \sin x$	$e^y[\frac{1}{2}(-\pi+S_1) \sin x + T_1 \cos x]$
φ_3	$\frac{-a}{2\sqrt{(z^2+a^2)^3}}$	$-\frac{1}{2} S_2$	0	0	infinite	$-\frac{1}{2} S_2 e^y \sin x$	$e^y[-\frac{1}{2} S_2 \sin x - T_2 \cos x]$

and for large positive x and y = 0 by

$$A'\cos(x+t) + B'\sin(x+t) + C'\cos(x-t) + D'\sin(x-t) \ .$$

Here the coefficients A,B,... are expressible in terms of the α_i, β_i in accordance with the asymptotic expressions of the φ_i (see the table on p. 32):

$$A = -\frac{1}{2}\alpha_o - \frac{1}{4}(\pi+S_1)\beta_2 + \frac{1}{4}S_2\beta_3$$

$$B = -\frac{1}{2}\beta_o + \frac{1}{4}(\pi+S_1)\alpha_2 - \frac{1}{4}S_2\alpha_3$$

$$C = -\frac{1}{2}\alpha_o + \frac{1}{4}(\pi+S_1)\beta_2 - \frac{1}{4}S_2\beta_3$$

$$D = \frac{1}{2}\beta_o + \frac{1}{4}(\pi+S_1)\alpha_2 - \frac{1}{4}S_2\alpha_3$$

(2.23)

$$A' = -\frac{1}{2}\alpha_o + \frac{1}{2}T_1\alpha_2 - \frac{1}{2}T_2\alpha_3 - \frac{1}{4}(-\pi+S_1)\beta_2 + \frac{1}{4}S_2\beta_3$$

$$B' = -\frac{1}{2}\beta_o + \frac{1}{2}T_1\beta_2 - \frac{1}{2}T_2\beta_3 + \frac{1}{4}(-\pi+S_1)\alpha_2 - \frac{1}{4}S_2\alpha_3$$

$$C' = -\frac{1}{2}\alpha_o + \frac{1}{2}T_1\alpha_2 - \frac{1}{2}T_2\alpha_3 + \frac{1}{4}(-\pi+S_1)\beta_2 - \frac{1}{4}S_2\beta_3$$

$$D' = \frac{1}{2}\beta_o - \frac{1}{2}T_1\beta_2 + \frac{1}{2}T_2\beta_3 + \frac{1}{4}(-\pi+S_1)\alpha_2 - \frac{1}{4}S_2\alpha_3 \ .$$

Prescribing the incoming wave from $x = -\infty$ is equivalent to prescribing the values of A and B. The assumption that no wave progressing to the left exists at $x = -\infty$ is equivalent to the conditions

$$C' = D' = 0 \ . \tag{2.24}$$

We thus have four conditions for the six constants $\alpha_o, \alpha_2, \alpha_3, \beta_o, \beta_2, \beta_3$. Consequently the motion still depends on two arbitrary real parameters. Further

assumptions are needed to determine the motion uniquely. A number of alternatives suggest themselves here. There are a number of ways in which additional physical assumptions can be introduced to arrive at a uniquely determined motion:

I) No breaking of waves occurs at all. Then

$$\alpha_2 = \beta_2 = 0 .$$

This assumption would lead to the solution found by Ursell. For the present case of the vertical barrier, this may well be the solution in best accord with observations.

II) The velocity stays finite at the edge of the barrier:

$$\alpha_3 = \beta_3 = 0 .$$

III) No reflected wave occurs:

$$C = D = 0 .$$

IV) Observations may furnish two relations connecting magnitude and phase of the logarithmic terms corresponding to breaking with the magnitude and phase of incoming and reflected waves.

A single condition would be furnished by the assumption that the velocities are in phase under the barrier. This behavior according to Ursell has been observed in experiments. It can easily be seen to be equivalent to proportionality of α_2, β_2 and α_3, β_3. This condition is automatically satisfied in cases I) and II).

In any case an inequality for the α_i, β_i is

obtained from the fact that energy is either preserved or is lost in the motion. It can be shown that the rate of flow of energy to the right through a vertical plane for a motion of the form (2.22) is proportional to

$$A^2 + B^2 - C^2 - D^2 \quad .$$

We can then take $A^2 + B^2$ as representing the rate of flow E_i of energy of the incoming wave, $-C^2 - D^2$ as that of the reflected wave, denoted by E_r, and $A'^2 + B'^2$ as that of the transmitted wave, denoted by E_t . The law that energy cannot be gained in the motion then takes the form

$$0 \leqq E_i + E_r - E_t = A^2 + B^2 - C^2 - D^2 - A'^2 - B'^2 \quad .$$

Relations (2.23), (2.24) yield, as is easily verified,

$$A^2 + B^2 - C^2 - D^2 - A'^2 - B'^2 = \frac{1}{2}(S_1T_2 - T_1S_2 - \pi T_2)(\alpha_2\beta_3 - \alpha_3\beta_2)$$

$$- \pi(\alpha_2\beta_o - \beta_2\alpha_o) \quad .$$

This relation shows that a change in energy can only occur, if α_2, β_2 do not both vanish, i.e. if the waves break on the barrier. If energy is not to be gained, the constants α_k, β_k must satisfy the inequality

$$\frac{1}{2}(S_1T_2 - T_1S_2 - \pi T_2)(\alpha_2\beta_3 - \beta_2\alpha_3) \geqq \pi(\alpha_2\beta_o - \beta_2\alpha_o) \quad .$$

3. Submerged infinite barrier.

In this section we consider a vertical barrier extending from $z = -ia$ to $z = -i\infty$. We make the same general assumptions on the behavior of φ or χ as before, with the only difference that χ now can be assumed to be regular at the origin. The only singularities occur then at the edge and at infinity. This problem also has been solved by Ursell, and the present method will lead to exactly the same solutions obtained by that author.

The function F may be defined again by (2.1). Then χ and F are regular in the region consisting of the lower half-plane slit from $-ia$ to $-i\infty$. F is real on the boundary of Γ.

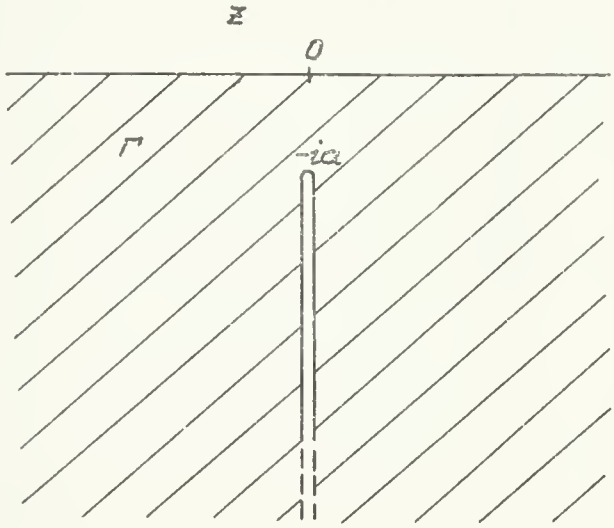

The function

$$z = \frac{a}{\sqrt{w^2-1}}$$

maps the upper w-half-plane on Γ, if $\sqrt{w^2-1}$ denotes that branch of the function that behaves like w for $w = \infty$. Then inversely

$$w = \frac{\sqrt{a^2+z^2}}{z} \tag{3.1}$$

where $\sqrt{a^2+z^2}$ denotes that branch that is uniquely defined in Γ and reduces to $+a$ for $z = 0$. Then w is an odd function of z.

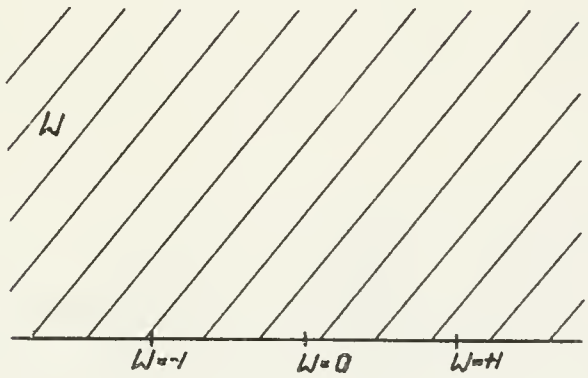

The condition that

$$\lim_{z \to -ia} (z^2 + a^2)\chi''(z) = 0$$

implies that

$$\lim_{w \to 0} w F = 0 .$$

Hence F as a function of w has a pole of order $\leqq 3$ at $w = 0$. F is bounded everywhere else, and hence

$$F = c_0 + c_1 w^{-1} + c_2 w^{-2} + c_3 w^{-3} . \tag{3.2}$$

The function $i \frac{d}{dz} \chi$ is real along the barrier, and hence as a function of w is real for real w with

$|w| < 1$. In addition

$$\lim_{w \to 0} w^2 \, i \frac{d}{dz} \chi = 0 \, .$$

Thus $i \frac{d}{dz} \chi$ as a function of w has a pole of order at most 1 at the origin:

$$i \frac{d}{dz} \chi = \sum_{k=-1}^{\infty} d_k \, w^k \quad .$$

Then

$$F = (1 - i \frac{d}{dz})(i \frac{d}{dz} \chi)$$

$$= (1 - i \frac{\sqrt{w^2-1}^{\,3}}{aw} \frac{d}{dw}) \sum_{k=-1}^{\infty} d_k w^k$$

$$= -d_{-1} \frac{1}{w^3} + d_1 \frac{1}{aw} + (\frac{3}{2a} + 1) d_{-1} \frac{1}{w}$$

$$+ \text{(regular terms in } w) \, .$$

It follows that F expanded in terms of w contains no even negative powers of w, and hence that

$$c_2 = 0 \, .$$

As a function of z

$$F(z) = c_o + (c_1 + c_3) \frac{z}{\sqrt{z^2+a^2}} - a^2 c_3 \frac{z}{\sqrt{z^2+a^2}^{\,3}} \quad .$$

Then

$$\chi' + i\chi = c_o z + (c_1+c_3)\sqrt{z^2+a^2} + a^2 c_3 \frac{1}{\sqrt{z^2+a^2}} + c_4 \quad .$$

It follows that for large z

$$\chi' + i\chi = (c_o \pm (c_1+c_3))z + (\text{bounded terms}),$$

where the positive sign holds for $R(z) > 0$, the negative one for $R(z) < 0$. As χ' and $R(\chi)$ are assumed to be bounded for large z with $Im(z) \leqq 0$, the relations

$$c_o + c_1 + c_3 = 0 \ , \ c_o - c_1 - c_3 = 0$$

must hold. As $\chi' + i\chi$ is real for real z, the coefficient c_4 must be real. Hence, changing χ by a suitable pure imaginary constant, we may assume that c_4 vanishes. Then

$$\chi' + i\chi = a^2 c_3 \frac{1}{\sqrt{z^2+a^2}} \quad .$$

Correspondingly

$$\chi(z) = e^{-iz}(a^2 c_3 \int_{-\infty}^{z} \frac{e^{i\eta}}{\sqrt{\eta^2+a^2}} d\eta + \beta)$$

$$i\chi'(z) = a^2 i c_3 \frac{1}{\sqrt{z^2+a^2}} + e^{-iz}(a^2 c_3 \int_{-\infty}^{z} \frac{e^{-i\eta}}{\eta+a} d\eta + \beta)$$

where the path of integration is taken in Γ .

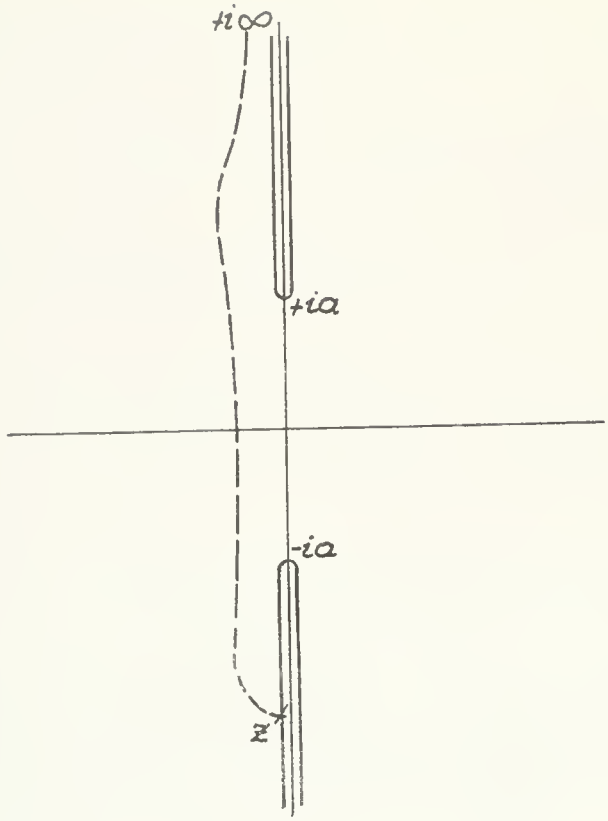

The condition

$$\mathrm{Im}(i\,\chi') = 0$$

for a point z on the barrier then yields

$$\mathrm{Im}(\beta) = -a^2 c_3 \mathrm{Im} \int_{-\infty}^{z} \frac{e^{i\eta}}{\sqrt{\eta^2+a^2}}\, d\eta$$

$$= -a^2 c_3 \mathrm{Im} \int_{+i\infty}^{z} \frac{e^{i\eta}}{\sqrt{\eta^2+a^2}}\, d\eta$$

(where the path runs to the left of the positive imaginary axis)

$$= -a^2 c_3 \mathrm{Im} \int_{+ia}^{-ia} \frac{e^{i\eta}}{\sqrt{\eta^2+a^2}}\, d\eta = a^2 c_3 \int_{-1}^{1} \frac{e^{-a\zeta}}{\sqrt{1-\zeta^2}}\, d\zeta$$

$$= a^2 c_3 \pi J_o(ia).$$

Thus $\mathrm{Im}(\beta)$ is uniquely determined in terms of c_3 by the formula

$$\mathrm{Im}(\beta) = a^2 c_3 \pi J_o(ia) \ .$$

The motion is thus seen to depend on two real constants c_3 and $R(\beta)$. Those constants can be adjusted in such a way that the resulting expression represents the effect of a wave progressing from $x = -\infty$ in the direction of increasing x. The discussion will be analagous to, but simpler than the one given in the last section for a finite barrier from the surface.

4. Asymptotic behavior of exponential integrals.

In the following sections we shall need some properties of the functions $H_\mu(z)$ defined by

$$(4.1) \quad H_\mu(z) = e^{\zeta_\mu z} \int_{-\infty}^{z} e^{-\zeta_\mu \eta} F(\eta)\, d\eta \quad (\mu = 0,1,\ldots,n) .$$

Here the ζ_μ are defined by (1.13). F is regular in Γ^*, real along the real axis, and has a zero of order (n + 1) at infinity, as indicated by (1.25).

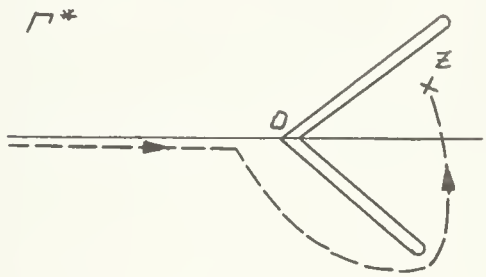

The integrals in (4.1) converge because of (1.14). $H_\mu(z)$ is uniquely defined in the region Γ^* slit along the negative real axis, if the path of integration starts out along the lower border of that slit. They satisfy

$$(4.2) \qquad H'_\mu(z) - \zeta_\mu H_\mu(z) = F(z) .$$

The values of $H_\mu(z)$ on opposite borders of the negative real axis are connected by the relation

$$(4.3) \qquad H_\mu(z + oi) = H_\mu(z - io) + C_\mu e^{\zeta_\mu z}$$

valid for negative real z, where C_μ denotes the constant

$$(4.4) \qquad C_\mu = \oint e^{-\zeta_\mu \eta} F(\eta) d\eta$$

(the integral being extended over a circle of radius > a about the origin). Thus the function

$$(4.5) \qquad H_\mu(z) - \frac{1}{2\pi i} C_\mu e^{\zeta_\mu z} \log z$$

is univalued in Γ^*.

The H_μ satisfy the symmetry condition

$$(4.6) \qquad H_\mu(z) = \overline{H_{n-\mu}(\bar{z})} + C_\mu e^{\zeta_\mu z} .$$

<u>Proof of (4.6)</u>:

From (1.16) it follows that for negative real z

$$\int_{-\infty}^{z} e^{-\zeta_\mu \eta} F(\eta) d\eta = \overline{\int_{-\infty}^{z} e^{-\zeta_{n-\mu} \eta} F(\eta) d\eta}$$

if the path of integration is taken along the negative real axis. Thus

$$H_\mu(z) = \overline{H_{n-\mu}(z)}$$

for z on the lower border of the negative real axis. Continuing analytically across the negative real axis the left hand side goes over into

$$H_\mu(z) - C_\mu e^{\zeta_\mu z}$$

according to (4.3), the right hand side goes over into the analytic function

$$\overline{H_{n-\mu}(\bar{z})} \ .$$

As both those functions are analytic and univalued in Γ^* slit along the negative real axis, they must be identical throughout that region.

Replacing μ by $n-\mu$ in (4.6) we obtain

$$H_{n-\mu}(z) = \overline{H_\mu(\bar{z})} + C_{n-\mu}\, e^{\zeta_{n-\mu} z} \ .$$

Comparing with (4.6) and using (1.16) it follows that

$$C_\mu = -\overline{C_{n-\mu}} \ . \tag{4.7}$$

<u>Lemma I</u>:

If $C_\mu = 0$, the function $H_\mu(z)$ is regular at infinity and has a zero of order $n + 1$ there.

<u>Proof</u>:

$C_\mu = 0$ implies that H_μ is univalued in Γ^*. Then H_μ permits a Laurent expansion of the form

$$H_\mu(z) = \sum_{k=-\infty}^{+\infty} \gamma_k z^{-k}$$

for $|z| > a$. Then according to (4.2) and (1.25) the γ_k satisfy the recursion formula

$$(k-1)\gamma_{k-1} + \zeta_\mu \gamma_k = -\alpha_k \quad (-\infty < k < +\infty) \ .$$

As α_k vanishes for $k \leqq n$, it follows that

$$\gamma_1 = \gamma_2 = \dots = \gamma_n = 0$$

and that

$$\gamma_k = \frac{\zeta^{-k}}{(-k)!}\gamma_o \quad \text{for} \quad k \leqq 0 .$$

Hence

$$H_\mu(z) = \gamma_o e^{\zeta\mu z} + \sum_{k=n+1}^{\infty} \gamma_k z^{-k} .$$

Here γ_o must however vanish, as obviously by definition

$$\lim_{z \to -\infty} H_\mu(z) = 0 .$$

<u>Lemma II</u>:

For $|z|$ large

$$(4.8) \qquad H_n(z) = \begin{cases} O\left(\frac{1}{z^{n+1}}\right) & \text{for } R(z) < 0,\ I_m(z) \leqq 0 \\ C_n e^{-iz} + O\left(\frac{1}{z^{n+1}}\right) & \text{otherwise} \end{cases} .$$

<u>Proof</u>:

We have

$$(4.9) \quad H_n(z) = e^{-iz}\int_{-\infty}^{z} e^{i\eta} F(\eta)d\eta = -iF(z)+ie^{-iz}\int_{-\infty}^{z} e^{i\eta}F'(\eta)d\eta .$$

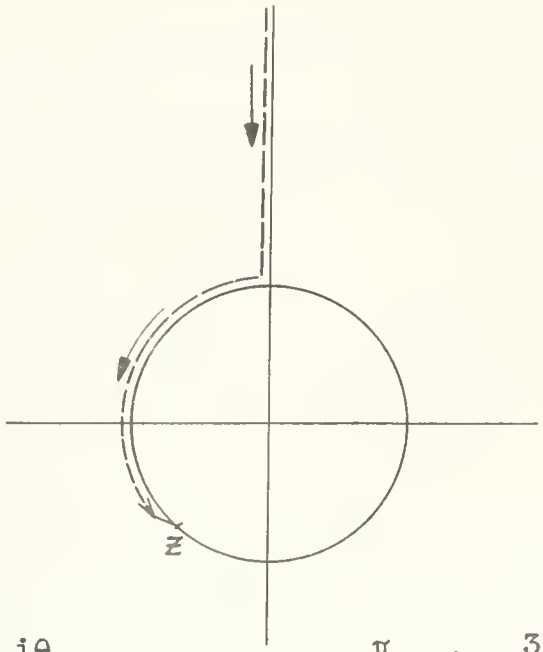

Let $z = re^{i\theta}$, where $r > a$, $-\frac{\pi}{2} \leqq \theta \leqq \frac{3}{2}\pi$. According to (1.25) there is an M such that

$$|F'(z)| < \frac{M}{r^{n+2}} .$$

For $-\frac{\pi}{2} < \theta < 0$ we can choose the path of integration so as to run from $+i\infty$ to ri along the positive imaginary axis, and then from ri to $re^{i\theta}$ counterclockwise along the circle $|\eta| = r$. Along this path $|e^{i\eta}| \leqq |e^{+iz}|$. Consequently

$$|H_n(z)| < |F(z)| + \int \frac{M}{\eta^{n+2}}\, d\eta$$

$$< |F(z)| + M\left(\frac{1}{(n+1)r^{n+1}} + \frac{\pi r}{r^{n+2}}\right) = O\left(\frac{1}{r^{n+1}}\right)$$

which proves the first part of (4.8). If $0 < \theta < \frac{3\pi}{2}$, we split the path into two parts. The first part shall run from $+i\infty$ around the circle $|\eta| = r$ back to $+i\infty$; the second part from $+i\infty$ along the positive

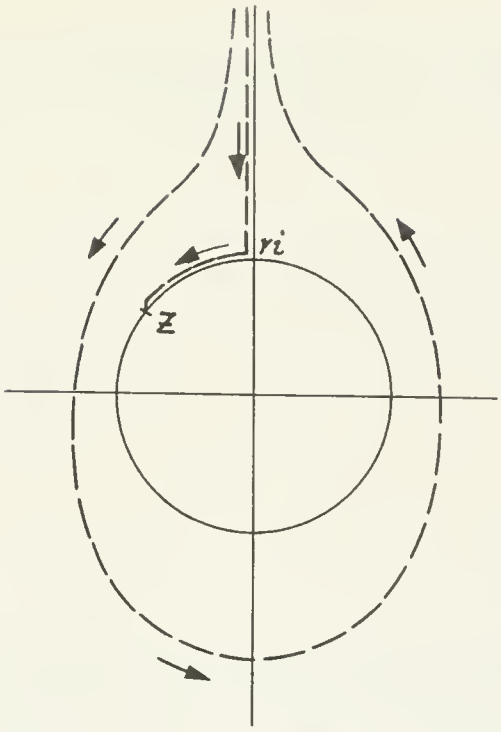

imaginary axis to ri, and then along the circle $|\eta| = r$ along the shortest path from $+ri$ to $re^{i\theta}$. The integral over the first part has the value C_n. On the second part $|e^{i\eta}| < |e^{+iz}|$, so that we have the same estimate as before.

5. Derivation of the complete system of conditions on the general solutions for the inclined barrier.

In section I it was seen that the most general function F satisfying the boundary conditions for F and having the proper singularities is represented by (1.25), and thus depends on 5n - 2 arbitrary constants c_k. The boundary conditions for F are however not equivalent to the original conditions (1.6), (1.7) for $\chi(z)$, which have to be satisfied. The conditions on the c_k that guarantee that (1.6), (1.7) hold, will be derived now.

The rational function $1/L(D)$ admits a partial fraction representation of the form

$$\frac{1}{L(D)} = \sum_{k=1}^{n} \frac{\sigma_k}{D-\zeta_k} + \sum_{k=1}^{n} \frac{\tau_k}{D^k} \quad . \tag{5.1}$$

Here

$$\sigma_k = \frac{1}{L'(\zeta_k)} \quad , \quad \tau_k = \frac{1}{(n-k)!} \left(\frac{d^{n-k} \frac{D^n}{L(D)}}{d\, D^{n-k}} \right)_{D=0} \quad . \tag{5.2}$$

More explicit expressions for the σ_k and τ_k can be obtained. Thus e.g.

$$\sigma_n = i\left(\frac{i-1}{\sqrt{2}}\right)^{n-1} \frac{1}{\sqrt{n}} \quad . \tag{5.3}$$

For what follows only certain symmetry properties of the σ_k and τ_k corresponding to (1.16) and (1.17) are of importance.

We have from (1.19)

$$L'(\zeta) = \varepsilon(\varepsilon\zeta_k)\, Q'(\varepsilon\zeta_k)$$

where Q' is a polynomial with real coefficients. Hence, using (1.17)

$$\varepsilon\sigma_k = \overline{\varepsilon\sigma_{n-k+1}} \; . \tag{5.4}$$

Similarly it follows from (5.2), (1.19) that

$$\mathrm{Im}(\varepsilon^k \tau_k) = 0 \; . \tag{5.5}$$

We have from (1.18)

$$\frac{D+i}{L(D)} = \frac{1}{P(D)} = \left(\sum_{k=1}^{n} \sigma_k + \tau_1\right) + \sum_{k=1}^{n-1} \frac{\sigma_k(i+\zeta_k)}{D-\zeta_k}$$

$$+ \sum_{k=1}^{n-1} \frac{(\tau_{k+1}+i\tau_k)}{D^k} + \frac{i\tau_n}{D^n} \; .$$

As 1/P(D) is a rational function with real coefficients and vanishing at infinity, it follows that

$$\sum_{k=1}^{n} \sigma_k + \tau_1 = 0 \tag{5.6}$$

$$\overline{(\zeta_k+i)\sigma_k} = (\zeta_{n-k}+i)\sigma_{n-k} \quad \text{for } k = 1,\ldots,n-1 \; ^{*} \tag{5.7}$$

---

* Relations (5.3), (5.7) for the σ_k are similar to those found for the coefficients c_k in the paper by J. J. Stoker, AMG-NYU 153, p. 95. They could be used for explicit calculation of the σ_k.

$$(5.8) \qquad \mathrm{Im}(\tau_{k+1} + i\,\tau_k) = 0 \quad \text{for} \quad k = 1,\ldots,n-1$$

$$(5.9) \qquad \mathrm{Im}(i\,\tau_n) = 0 \; .$$

In accordance with the partial fraction resolution (5.1) we can write the general solution of the differential equation (1.8) for $\chi(z)$ in the form

$$\chi(z) = L(D)^{-1} F$$

$$= \sum_{k=1}^{n} \sigma_k (D-\zeta_k)^{-1} F + \sum_{k=1}^{n} \tau_k D^{-k} F$$

$$+ \sum_{k=1}^{n} a_k e^{\zeta_k z} + \sum_{k=0}^{n-1} b_k z^k \; .$$

Here the a_k and b_k are arbitrary constants, $(D-\zeta_k)^{-1}F$ denotes a special function with the property that the operator $(D-\zeta_k)$ applied to it gives F, and $D^{-k}F$ a special function with F as k-th derivative. We are free to choose

$$(5.10) \qquad (D-\zeta_k)^{-1}F = e^{\zeta_k z} \int_{-\infty}^{z} e^{-\zeta_k \eta} F(\eta)\,d\eta = H_k(z)$$

$$(5.11) \qquad D^{-k}F = \frac{1}{(k-1)!} \int_{-\infty}^{z} (z-\eta)^{k-1} F(\eta)\,d\eta = h_k(z) \; .$$

Because of (1.19) and $R(\zeta_k) \leqq 0$, all integrals converge absolutely.

As $H_{\zeta_k}(z)$ and $h_k(z)$ tend towards 0 for $z \to -\infty$, and as $\chi(z)$ is bounded at infinity, it follows that the real part of

$$\sum_{k=1}^{n} a_k e^{\zeta_k z} + \sum_{k=0}^{n-1} b_k z^k$$

must be bounded for $z \to -\infty$. As all the ζ_k with the exception of ζ_n have negative real parts and are distinct, it follows that all a_k and b_k with the exception of a_n, b_o, b_1 must vanish. Then for large negative real z

$$(D + i)\ \chi(z) \sim (b_1 + ib_o) + ib_1 z$$

and hence because of (1.24)

$$b_o = b_1 = 0 .$$

Consequently, writing α for a_n,

$$(5.12)\quad \chi(z) = \alpha e^{-iz} + \sum_{k=1}^{n} \sigma_k H_k(z) + \sum_{k=1}^{n} \tau_k h_k(z) \quad .$$

We have

$$(5.13)\qquad D\ H_k = \zeta_k H_k + F$$

$$(5.14)\qquad D\ h_k = \begin{cases} h_{k-1} & \text{for } k = 2,\ldots,n \\ F & \text{for } k = 1 \end{cases}$$

and hence, using (5.6),

$$f = (D+i)\chi = \sum_{k=1}^{n} \sigma_k(\zeta_k+i)H_k(z)$$

(5.15)

$$+ \sum_{k=1}^{n-1} (\tau_{k-1}+i\,\tau_k)h_k + i\,\tau_n h_n \ .$$

According to (1.24) the function

$$f = (D + i)\,\chi$$

is regular at infinity. On the other hand (4.3) shows that $H_{\zeta_k}(z)$ changes by

$$C_k\, e^{\zeta_k z}$$

along a closed path surrounding ∞. The functions $h_k(z)$ are regular at infinity; indeed from (1.25) they have an expansion of the form

$$(5.16) \qquad h_k(z) = D^{-k}F = \sum_{r=n+1}^{\infty} \frac{\alpha_k z^{k-r}}{(k-r)(k-r+1)\ldots(1-r)} \ .$$

Consequently

$$\sum_{k=1}^{n-1} \sigma_k(\zeta_k+i)\, C_k\, e^{\zeta_k z} \equiv 0 \ .$$

It follows that

$$(5.17) \qquad C_k = \oint e^{-\zeta_k \eta} F(\eta)d\eta = 0 \quad \text{for } k = 1,\ldots,n-1$$

where the integrals are extended over a path with $|\eta| > a$.

Conditions (5.17) are already sufficient in order that $\chi(z)$ has the required behavior at infinity and along the real axis. We have indeed from (5.12), (5.16), (4.8) for large $|z|$ with $R(z) < 0$

$$\chi(z) = \alpha e^{-iz} + O(\tfrac{1}{z}) \tag{5.18}$$

and from (5.17), (4.8) for large $|z|$ with $R(z) > 0$

$$\chi(z) = (\alpha + \sigma_n C_n)e^{-iz} + O(\tfrac{1}{z}) \tag{5.19}$$

with corresponding formulae for $\chi'(z)$. Thus $\chi'(z)$ is bounded at infinity in Γ, and

$$\lim_{y \to -\infty} \chi'(z) = 0 .$$

It follows from (4.6), (5.17) that for real $z \neq 0$

$$\overline{H_k(z)} = H_{n-k}(z) \quad \text{for} \quad k = 1,\ldots,n-1 .$$

Besides $h_k(z)$ is real, as the coefficients α_k in (5.16) are real. Then (5.7), (5.8), (5.9) show that all terms in the representation (5.15) of f are either real or conjugate imaginary. Consequently $f = (D+i)\chi$ is real for all positive and negative real $z \neq 0$.

It remains to derive the restrictions on F introduced by the barrier condition (1.11). For this purpose we introduce the abbreviation

$$r_\mu(z) = \frac{L(D)}{D-\zeta_\mu}\chi \quad \text{for} \quad \mu = 1,\ldots,n . \tag{5.20}$$

Here $L(D)/(D-\zeta)$ is of course a polynomial in D. We have from (1.12)

$$(5.21) \qquad (D-\zeta_\mu)\, r_\mu(z) = L(D)\,\chi = F(z) .$$

Hence, as H_μ is a solution of the same differential equation,

$$r_\mu(z) = H_\mu(z) + d_\mu e^{\zeta_\mu z}$$

with a certain constant d_μ. The constants d_μ can be determined from the behavior at infinity. χ and its derivatives are bounded for real z with large absolute values; so is $H_\mu(z)$ on the basis of (5.17). Hence

$$d_\mu = 0 \quad \text{for} \quad \mu = 1,\ldots,n-1 .$$

For large negative real z all $H_k, h_k(z)$ and their derivatives tend to zero, and hence from (5.12)

$$r_n(z) \sim \frac{L(D)}{D-\zeta_n}\,\alpha e^{-iz} = L'(-i)\,\alpha e^{-iz}$$

$$= \sigma_n^{-1}\,\alpha e^{-iz} .$$

Consequently

$$(5.22) \qquad r_\mu(z) = H_\mu(z) + \frac{\alpha}{\sigma_n}\,\delta_\mu^n\, e^{-iz} .$$

We now form the expression

$$\varepsilon^{-1}(r_\mu + r_{n-\mu+1}) = \varepsilon^{-1}\left(\frac{L(D)}{D-\zeta_\mu} + \frac{L(D)}{D-\zeta_{n-\mu+1}}\right)\chi$$

$$=\left(\frac{Q(\varepsilon D)}{\varepsilon D-\varepsilon\zeta_\mu} + \frac{Q(\varepsilon D)}{\varepsilon D-\varepsilon\zeta_{n-\mu+1}}\right)\varepsilon D\chi \ .$$

As Q has real coefficients and (1.13) holds, the differential operator applied here to $(\varepsilon D\chi)$ is a polynomial in εD with real coefficients. Hence, when (1.11) holds, it follows that

$$\varepsilon^{-1}(r_\mu + r_{n-\mu+1}) = u \tag{5.23}$$

is real along the barrier. Applying the operator (εD) to u we again get a real expression

$$D(r_\mu + r_{n-\mu+1}) = 2F + \zeta_\mu r_\mu + \zeta_{n-\mu+1} r_{n-\mu+1}$$

(see (5.21)) and hence, as F is real, the expression

$$\zeta_\mu r_\mu + \zeta_{n-\mu+1} r_{n-\mu+1} = v \tag{5.24}$$

is real along the barrier. If $\mu \neq n-\mu+1$ we get from (5.23), (5.24)

$$i\,\varepsilon^{-1} r_\mu = (\varepsilon\zeta_{n-\mu+1}u - v)\frac{i}{\varepsilon\zeta_{n-\mu+1} - \varepsilon\zeta_\mu}$$

$$-\,i\varepsilon^{-1} r_{n-\mu+1} = (\varepsilon\zeta_\mu u - v)\frac{i}{\varepsilon\zeta_{n-\mu+1} - \varepsilon\zeta_\mu}$$

and thus with the help of (1.17)

$$i\,\varepsilon^{-1} r_\mu = \overline{-i\,\varepsilon^{-1} r_{n-\mu+1}}$$

or

$$r_\mu = \varepsilon^2\, \overline{r_{n-\mu+1}}\ .$$

The same relation follows from (5.23) alone, if $\mu = n-\mu+1$. Substituting the expression (5.22) for r_μ, we see that along the barrier

$$(5.25)\quad H_\mu(z) = \varepsilon^2\, \overline{H_{n-\mu+1}(z)} + \left(\frac{\bar{\alpha}}{\bar{\sigma}_n}\,\delta^1_\mu - \frac{\alpha}{\sigma_n}\,\delta^n_\mu\right) e^{\zeta_\mu z}$$

$$\text{for}\quad \mu = 1,\ldots,n\ .$$

Similarly, putting

$$\frac{L}{D^k}\,\chi = s_k(z)\ ,$$

we find

$$D^k\, s_k = F\ .$$

Hence s_k and h_k differ at most by a polynomial. As both s_k and h_k vanish at infinity, they must be identical: Then

$$\varepsilon^{-k} h_k(z) = \frac{L(D)}{(\varepsilon D)^k}\,\chi = \frac{Q(\varepsilon D)}{(\varepsilon D)^k}\,(\varepsilon D\chi)\ .$$

As $Q(\varepsilon D)/(\varepsilon D)^k$ for $k < n$ is a polynomial in (εD) with real coefficients, it follows from (1.11) that along the barrier

$$(5.28) \qquad \mathrm{Im}(\varepsilon^{-k} h_k(z)) = 0 \quad \text{for} \quad k = 1,\ldots,n-1 \quad .$$

Conditions (5.26), (5.28) which have been derived from (1.11) are actually equivalent to (1.11), as can easily be verified from the expression (5.12) for χ , if use is made of (5.4), (5.3), (1.17).

The complete set of conditions on F consists then of (5.17) and the relations (5.26), (5.28), which have to be satisfied for every z on the barrier. We shall replace the identities (5.26), (5.28) by a finite set of conditions in the next section.

6. Complete finite system of conditions for the solution.

In order to permit a reduction of the conditions for F to explicit equations for the coefficients c_k, it is convenient to study the conditions in terms of the variable w introduced in (1.31). We denote by T_k for $k = 0,\ldots,4n-1$ the sector defined by

$$\frac{k}{2n} \leqq \arg w < \frac{(k+1)}{2n} \quad .$$

We define the points A_r and B_r of the w-plane respectively by

$$(6.1) \qquad A_r = \varepsilon^{-1-2r} \ , \ B_r = (2n-1)^{-\frac{1}{2n}} \ \varepsilon^{-2r} \quad .$$

Then

$$A_o = \varepsilon^{-1} \quad , \quad B_o = \mu$$

are the points on the boundary of T_o corresponding respectively to the edge of the barrier and to the point at infinity of the z-plane. The function G(w) is real on the boundary of T_o and hence on all rays $OA_r\infty$ and $OB_r\infty$. It satisfies the relation

$$(6.2) \qquad G(\varepsilon^2 w) = G(w) \ .$$

G has poles of order $\leqq 4n-1$ at the A_r, zeros of order $(n + 1)$ at the B_r and poles at 0 and ∞. The rational function K(w) has poles of order 1 at the B_r.

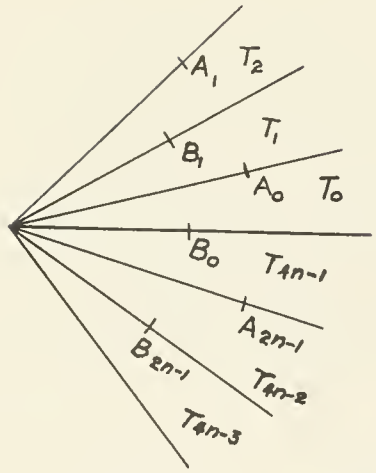

It is then obvious that the functions H_k and h_k as functions of w, which are integrals of univalued functions, can be continued into the whole w-plane, with possible branchpoints at the points $A_r, B_r, 0, \infty$. The same holds then for the function χ. It will first be shown that as a consequence of the barrier condition no branchpoints actually occur at the A_r.

We observe that the function $\varepsilon\chi'(z)$ is real along the barrier, and satisfies

$$\lim_{z \to a\varepsilon} (z-a\varepsilon)\ \varepsilon\chi'(z) = 0 . \tag{6.3}$$

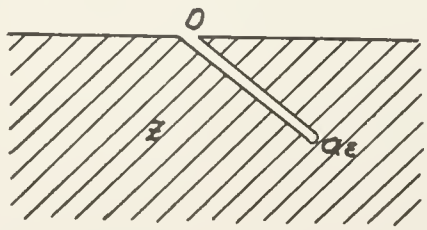

The transformation

$$z = \varepsilon (a-\zeta^2) \tag{6.3a}$$

maps the interval $-\sqrt{a} < \zeta < +\sqrt{a}$ of the real ζ-axis on the two borders of the barrier in the z-plane. Then $\varepsilon\chi'$ as a function of ζ is real along the real ζ-axis in a neighborhood of the origin, and hence univalued in a full neighborhood of the origin.

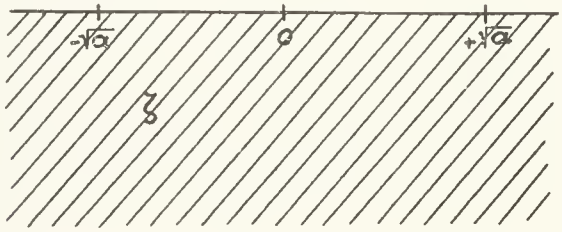

Besides because of (6.3)

$$\lim_{\zeta \to 0} \zeta^2 \; \varepsilon\chi' = 0$$

so that $\varepsilon\chi'$ has a pole of order at most 1 at $\zeta = 0$. Consequently an expansion of the form

$$\varepsilon\chi' = \sum_{k=-1}^{\infty} a_k \zeta^k = \sum_{k=-1}^{\infty} a_k (a-\varepsilon^{-1}z)^{k/2} \tag{6.4}$$

is valid near the edge. As F is formed by applying the (2n - 1)st order differential operator $Q(\varepsilon D)$ to $\varepsilon\chi'$, it follows that F permits an expansion of the

form

$$(6.5) \qquad F(z) = \sum_{k=1-4n}^{\infty} b_k (a-\varepsilon^{-1})^{k/2} = \sum_{k=1-4n}^{\infty} b_k \zeta^k \quad .$$

It is obvious that no negative integral powers of $(a-\varepsilon^{-1}z)$ can arise by differentiation of (6.4). Hence we have that in the expansion (6.5) of F the coefficients with even negative index must vanish:

$$(6.6) \qquad b_{-2} = b_{-4} = \dots = b_{2-4n} = 0 \ .$$

Let now U(z) denote an arbitrary function of z, which is regular at $z = a\varepsilon$. Then relations (6.6) imply that

$$(6.7) \qquad U(z)\ F(z)\ \frac{dz}{d\zeta}$$

as a function of ζ has residue 0 at $\zeta = 0$. Indeed the expression (6.7) reduces to

$$-2\,\varepsilon\, U(\varepsilon a - \varepsilon\zeta^2) \sum_{k=1-4n}^{\infty} b_k \zeta^{k+1}$$

and no odd negative powers of ζ can occur in the expansion of this expression with respect to ζ, if (6.6) holds. On the other hand relations (6.6) can be seen to be equivalent to the conditions that the residue of

$$(6.8) \qquad (z-a\varepsilon)^k\ F(z)\ \frac{dz}{d\zeta} \qquad (k = 0,1,\dots,2n-2)$$

considered as a function of ζ vanishes for $\zeta = 0$.

Comparing (6.3a) with (1.31) we have

$$\zeta^2 = \varepsilon \frac{(2n-1)w^{2n}-1-2n\varepsilon^{-1}w^{2n-1}}{(2n-1)w^{2n}-1} .$$

Here the numerator on the right hand side is a polynomial in w which has a zero of order 2 for $w = \varepsilon^{-1}$. It follows that in the neighborhood of $w = \varepsilon^{-1}$ or $\zeta = 0$ the variables ζ and w are univalued functions of each other. Consequently

$$\oint U(z)\ F(z)\ \frac{dz}{d\zeta}\ d\zeta$$

extended in the ζ-plane around a path around the origin goes over into

$$\oint U(K(w))\ G(w)\ K'(w)\ dw$$

over a closed path about the point $w = \varepsilon^{-1}$. Thus the vanishing of the residue of (6.7) at $\zeta = 0$ is equivalent to the vanishing of the residue of

$$U(K(w))\ G(w)\ K'(w) \tag{6.9}$$

at $w = \varepsilon^{-1}$. The vanishing of the residue of (6.9) for any regular function U is equivalent to the vanishing of the residue of the functions

$$(K(w)-a\varepsilon)^k G(w)K'(w) \quad \text{for } k = 0,1,\ldots,2n-2 . \tag{6.10}$$

We have then the condition that the coefficient of $(w-\varepsilon^{-1})^{-1}$ in the expansion of (6.10) in powers of $(w-\varepsilon^{-1})$ vanishes. Using the expression (1.29) for G(w) this obviously yields (2n-1) linear homogeneous equations for the c_k with coefficients that are rational numbers, independent of a.

Replacing w in (6.9) by $\varepsilon^{2r}w$ results in the expression

$$\varepsilon^{-4r}U(\varepsilon^{-2r}K(w))G(w)K'(w) ,$$

which is again of the same form. It follows that for a function U(z) which is regular at all points $z = \varepsilon^{-2r}$ the expression (6.9) has residue 0 at all points A_r.

By the substitution (1.31) the functions H_k and h_k defined by (5.10), (5.11) go over respectively into functions

$$(6.11)\quad P_k(w) = H_k(K(w)) = e^{\zeta_k K(w)} \int_{B_o}^{w} e^{-\zeta_k K(v)} G(v)K'(v)dv$$

$$(6.12)\quad p_k(w) = h_k(K(w)) = \frac{1}{(k-1)!} \int_{B_o}^{w} [K(w) - K(v)]^{k-1} GK'dv$$

where the path of integration starting with B_o first runs along the real axis to the left.

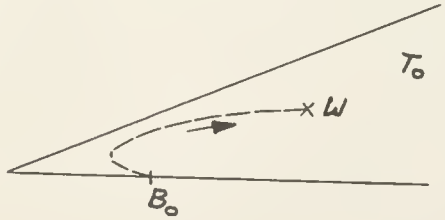

$P_k(w)$ and $p_k(w)$ are then uniquely defined functions in T_o and can be continued outside that sector by means of formulae (6.11), (6.12) with values depending possibly on the choice of the path of integration. The functions of η

$$e^{-\zeta_k \eta} \quad \text{and} \quad (z-\eta)^{k-1}$$

are regular for all η. Taking them as U in (6.9) it is seen that the integrands in (6.11), (6.12) have residues 0 at all A_r, and hence that the $P_k(w)$ and $p_k(w)$ have no branchpoints at the A_r (whatever path may have been chosen in reaching those points).

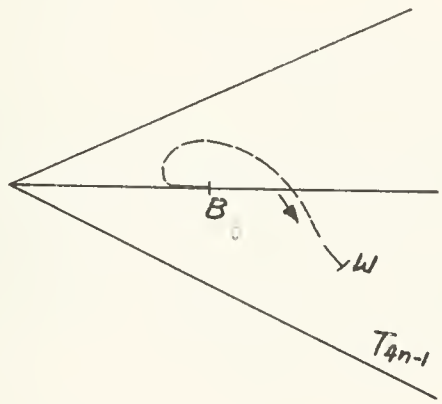

To define P_k and p_k in T_{4n-1} in agreement with the convention made already in defining H_k and h_k in Γ^*, we have to take the path of integration so as to cross the real w-axis in the interval between B_o and $+\infty$.

We first discuss the behavior of the functions $p_k(w)$. The integrand in (6.12) has a zero of order n-k at $v = B_o$, and hence is finite at B_o. As G(v) and K(v) are real for real v, it follows that $p_k(w)$ is real

for real w. Besides, because of (6.2) and

(6.12a) $K(\varepsilon^2 w) = \varepsilon^{-2}K(w)$, $K'(\varepsilon^2 w) = \varepsilon^{-4}K'(w)$

we have

(6.13) $$p_k(\varepsilon^2 w = \varepsilon^{-2k}p_k(w) - \varepsilon^{-2k}\int_{B_o}^{B_1}(K(w)-K(v))^{k-1}G(v)K'(v)dv \ .$$

As K(w) is rational, it follows that $p_k(w)$ has no branchpoints at any of the points B_r.

We observe that at infinity

(6.14) $$G(w) = c_{5n-2}w^{2n} + (\text{bounded terms}) \ .$$

Similarly at infinity

$$K(w)^{-2n} = \left(\frac{2n-1}{2na}\right)^{2n} w^{2n} + (\text{bounded terms}) \ .$$

Hence, denoting by γ the constant

$$\gamma = \left(\frac{2na}{2n-1}\right)^{2n} c_{5n-2} \ ,$$

we have in

(6.15) $$g(w) = G(w) - \gamma K^{-2n}(w)$$

a function, which is bounded at infinity. As

$$K(v) = O\left(\frac{1}{v}\right) \quad K'(v) = O\left(\frac{1}{v^2}\right)$$

we have for $w = t\,\varepsilon^{-1}$ with $t > 1$,

$$p_k(v) = \frac{1}{(k-1)!}\int_{B_o}^{\infty}[K(w)-K(v)]^{k-1}g(v)K'(v)dv$$

$$(6.16)\qquad + \frac{\gamma}{(k-1)!}\int_{B_o}^{w}[K(w)-K(v)]^{k-1}K^{-2n}(v)K'(v)dv$$

$$+ \frac{1}{(k-1)!}\int_{\infty}^{\varepsilon^{-1}t}[K(w)-K(v)]^{k-1}g(v)K'(v)dv\ .$$

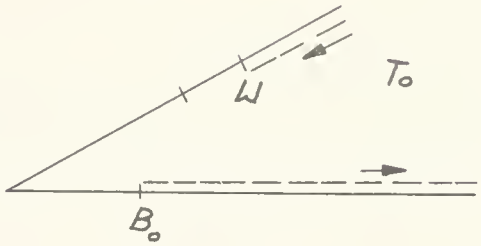

Here the second integral has the value

$$\frac{\gamma}{(k-1)!}\int_{-\infty}^{K(w)}[K(w)-\eta]^{k-1}\ \eta^{-2n}\ d\eta = D^{-k}z^{-2n}$$

$$= \frac{K^{k-2n}(w)\gamma}{(1-2n)\ldots(k-2n)} = \frac{-\varepsilon^{k}K(t)\gamma}{(1-2n)\ldots(k-2n)}\ .$$

The third integral in (6.16) is of the form ε^k(real number), as $\varepsilon^{-1}K(w)$, $\varepsilon^{-1}K(v)$, $g(v)$, εdv, $\varepsilon^{-2}K'(v)$ are all real. Now according to condition (5.28) $\varepsilon^{-k}h_k(z)$ must be real along the barrier, i.e. $\varepsilon^{-k}p_k(w)$ must be real along the ray $0, \varepsilon^{-1}, \infty$. It follows that, as it is already known that $p_k(w)$ has no branchpoint at ε^{-1}, it is sufficient to have $\varepsilon^{-k}p_k(w)$ real along the segment ε^{-1}, ∞. The reality of $p_k(w)\,\varepsilon^{-k}$ on that segment is according to (6.16) equivalent with the reality of

$$(6.17) \qquad \varepsilon^{-k} \int_{B_o}^{\infty} [K(w)-K(v)]^{k-1}\, g(v)K'(v)dv$$

for $w = \varepsilon^{-1}t$ with $t > 1$. The expression (6.17) is a polynomial in the real variable $\varepsilon^{-1}K(w) = K(t)$. All coefficients of that polynomial have to be real, i.e.

$$\varepsilon^{-1-r} \int_{B_o}^{\infty} K(v)^{r-1}\, g(v)K'(v)dv \quad (r = 0,\ldots,k-1)$$

must be real. As the integrand is real along the path of integration, which falls into the real v-axis, and ε^{-1-r} is not real, this amounts to

$$(6.18) \qquad \int_{B_o}^{\infty} K(v)^{r}\, g(v)K'(v)dv = 0 \quad \text{for} \quad r = 0,\ldots,n-2$$

(k being any of the numbers $1,\ldots,n$). Relations (6.18), which are seen to be equivalent to (5.28), constitute (n-1) homogeneous equations for the c_k, with coefficients, which are real, are independent of a, and can be evaluated explicitly as definite integrals of rational functions.

Incidentally it is seen from (6.16) that $p_k(w)$ has no branchpoint at $w = \infty$, as the first integral has been seen to vanish, the second one is a rational function from its explicit expression, and the integrand of the third one is $O(\frac{1}{v^2})$ at $v = \infty$. The function $p_k(w)$ having no branchpoints at the points A_r, B_r, ∞, cannot then have a branchpoint at the only other possible place $w = 0$. As $p_k(w)$ is formed by integration of rational functions, it follows that $p_k(w)$ is a rational function of w, with its only possible poles at the A_r and the origin.

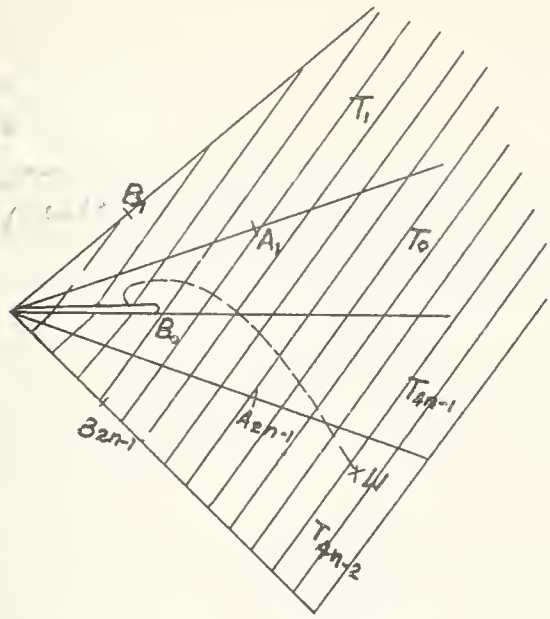

We pass on to the consideration of the functions $P_k(w)$, which have been defined uniquely in the region formed by the sectors T_0 and T_{4n-1}, slit from 0 to B_0 along the real axis. This region is the image of Γ^* slit along the negative real z-axis under the mapping $z = K(w)$. Conjugate imaginary points go over into conjugate imaginary points under that mapping. Then relations (4.6) yield

$$(6.19)\quad P_\mu(w) = \overline{P_{n-\mu}(\bar{w})} + C_\mu e^{\zeta_\mu K(w)} \quad \text{for} \quad \mu = 0,\ldots,n\ .$$

These are not conditions for the c_k since they are satisfied identically.

As a consequence of the conditions already obtained from (6.10), the $P_k(w)$ have no branchpoints at the A_r. Then $P_\mu(w)$ is immediately defined uniquely in the region consisting of the four sectors T_{4n-2}, T_{4n-1}, T_0, T_1, slit from 0 to B_0. By analytic continuation relation (6.19) persists in this larger region. Applying the substitution $v = \varepsilon^{-2}u$ in (6.11) we have, using (6.2), (6.12a)

$$P_k(w) = \varepsilon^{\zeta_{k-1}K(\varepsilon^2 w)}\, \varepsilon^2 \int_{B_{2n-1}}^{\varepsilon^2 w} e^{-\zeta_{k-1}K(u)}\, G(u)K'(u)du$$

where the path of integration lies in the region formed by $T_{4n-4}, T_{4n-3}, T_{4n-2}, T_{4n-1}$ slit along OB_{2n-1}, and runs first along the upper side of the segment OB_{2n-1}. If now $k \geqq 1$, and if w lies in $T_0 + T_1$, the path of integration can be broken up into a part running from B_{2n-1} to B_0 and a part running from B_0 to $\varepsilon^2 w$.

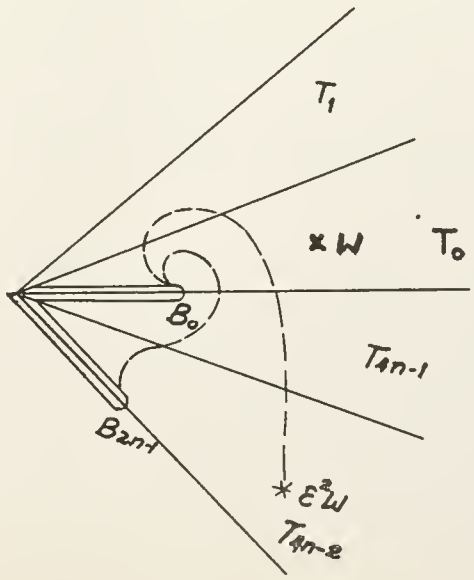

There results the formula

(6.20)

$$P_k(w) = \varepsilon^2 P_{k-1}(\varepsilon^2 w) + \varepsilon^2 e^{\zeta_k K(w)} \int_{B_{2n-1}}^{B_0} e^{-\zeta_{k-1} K(u)} G(u) K' du$$

$$= \varepsilon^2 P_{k-1}(\varepsilon^2 w) + e^{\zeta_k K(w)} \int_{B_0}^{B_1} e^{-\zeta_k K(v)} G(v) K'(v) dv$$

$$(k = 1, \ldots, n) .$$

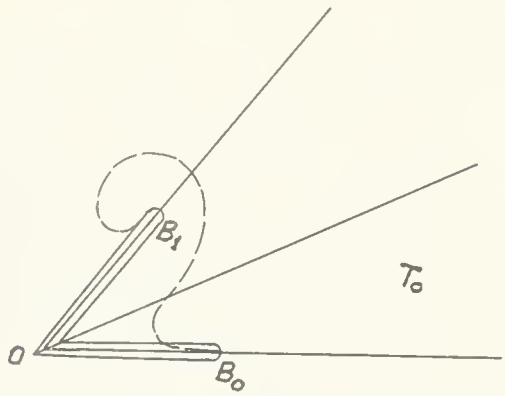

Here the path of integration in the last integral starts along the upper side of the segment OB_0 and ends on the upper side of the segment OB_1. We have from (6.19)

$$P_{k-1}(\varepsilon^2 w) = \overline{P_{n-k+1}(\overline{\varepsilon^2 w})} + C_{k-1} e^{\zeta_k K(w)}$$

so that (6.20) may also be written

$$(6.21)\quad P_k(w) = \varepsilon^2\overline{P_{n-k+1}(\overline{\varepsilon^2 w})} + e^{\zeta_k K(w)}\left(C_{k-1} + \int_{B_o}^{B_1} e^{-\zeta_k K(v)} GK'dv\right)$$

for w in $T_o + T_1$ and $k = 1,\ldots,n$. Replacing k by $n-k+1$ and w by $\varepsilon^2 w$ (which again lies in $T_o + T_1$) we get from (6.16)

$$P_{n-k+1}(\overline{\varepsilon^2 w}) = \varepsilon^2\overline{P_k(w)} + e^{\zeta_{n-k}K(w)}\left[C_{n-k} + \int_{B_o}^{B_1} e^{-\zeta_{n-k+1}K} GK'dv\right] .$$

Comparing with (6.21) and using (4.7) it follows that

$$(6.22)\quad \overline{\int_{B_o}^{B_1} e^{-\zeta_{n-k+1}K(v)} G(v)K'(v)dv} = C_k - \varepsilon^{-2}C_{k-1}$$

$$- \varepsilon^{-2}\int_{B_o}^{B_1} e^{-\zeta_k K(v)} G(v)K'(v)dv$$

for $k = 1,\ldots,n$.

We are now in a position to formulate conditions (5.25) in a simple fashion. z on the barrier corresponds to $w = \varepsilon^{-1}t$ with real positive t. For such w the condition is that

$$(6.23)\quad P_k(w) = \varepsilon^2\overline{P_{n-k+1}(w)} + \left(\frac{\bar{\alpha}}{\bar{\sigma}_n}\delta_k^1\varepsilon^2 - \frac{\alpha}{\sigma_n}\delta_k^n\right)e^{\zeta_k K(w)} .$$

For $w = \varepsilon^{-1}t$ we have $w = \overline{\varepsilon^2 w}$. Thus using the identities (6.21), relations (6.23) are seen to be equivalent to

$$(6.24)\quad \int_{B_o}^{B_1} e^{-\zeta_k K(v)} G(v)K'(v)dv = -C_{k-1} + \frac{\bar{\alpha}}{\bar{\sigma}_n}\delta_k^1 \varepsilon^2 - \frac{\alpha}{\sigma_n}\delta_k^n$$

$$k = 1,\ldots,n\ .$$

We have in (6.24) a system of n linear equations with complex coefficients for the real numbers c_k. In (5.17)

$$(6.25)\qquad C_k = 0 \quad \text{for} \quad k = 1,\ldots,n-1$$

we have another such system of n-1 equations. In view of the identical relations (4.7) and (6.22) these 2n-1 equations with complex coefficients can be seen to be equivalent to the (2n-1) equations with real coefficients:

$$(6.26)\qquad R(\varepsilon^{-1}C_k) = 0 \quad \text{for} \quad k = 1,\ldots,n-1$$

$$(6.27)\quad R\left(\int_{B_o}^{B_1} e^{-\zeta_k K(v)} G(v)K'(v)dv + C_{k-1} - \frac{\bar{\alpha}}{\bar{\sigma}_n}\delta_k^1 \varepsilon^2 + \frac{\alpha}{\sigma_n}\delta_k^n\right) = 0$$

$$\text{for } k = 1,\ldots,n\ .$$

Indeed (6.26) implies that

$$\varepsilon^{-1}C_k = iv_k \quad \text{for} \quad k = 1,\ldots,n-1$$

with real v_k. Then also

$$\varepsilon^{-1}C_{n-k} = iv_{n-k}$$

and hence, using (4.7)

$$\overline{\varepsilon^{-1}c_{n-k}} = -\varepsilon c_k = -iv_{n-k} \ .$$

Thus

$$\varepsilon^2 v_k = v_{n-k} \ ,$$

and hence, as ε^2 is not real for $n > 1$,

$$v_k = v_{n-k} = 0 \ .$$

Similarly, using (6.22) relations (6.27) already imply (6.24).

We have found now that the boundary conditions for χ are equivalent to the

$$(2n-1) + (n-1) + (n-1) + n = 5n-3$$

linear equations with real coefficients for the c_k respectively obtained from (6.10), (6.18), (6.26), and (6.27).

These relations can be written explicitly as linear equations for the c_k, if we introduce the rational functions

$$\xi_r(w) = K'(w) \frac{[w^{2n} - \frac{1}{2n-1}]^{n+1}}{w^{2n(2n-1)}(1+w^{2n})^{4n-1}} w^{2nr}$$

for $r = 0,1,\ldots,5n-2$. Then (6.10) can be written

$$\sum_{r=0}^{5n-2} c_r \oint (K(w) - a\,\varepsilon)^k \, \xi_r(w)dw = 0$$

for $k = 0,1,\ldots,2n-2$

where the integral is taken over a closed path about the point ε^{-1}.

Relations (6.18) can be written

$$\sum_{k=0}^{5n-3} c_r \int_{\mu}^{\infty} K^k(w) \;\; \xi_r(w)dw +$$

$$c_{5n-2} \int_{\mu}^{\infty} K^k(w)[\,\xi_{5n-2}(w) - (\frac{2na}{(2n-1)K(w)})^{2n}]dw = 0$$

for $k = 0,1,\ldots,n-2$.

Relations (6.27) become

$$\sum_{r=0}^{5n-2} c_r \, R(\,\varepsilon^{-1} \oint e^{-\zeta_k K(w)} \; \xi_r(w)dw) = 0$$

for $k = 1,\ldots,n-1$

where the integral is extended over a closed path about the point $B_o = \mu$. Finally (6.27) becomes

$$\sum_{r=0}^{5n-2} c_r \, R[\int_{\mu}^{\varepsilon^{-2}\mu} e^{-\zeta_k K(w)} \; \xi_r(w)dw - \frac{\bar{\alpha}}{\bar{\sigma}_n} \; \delta_k^1 \varepsilon^2$$

$$+ \frac{\alpha}{\sigma_n} \; \delta_k^n + \oint e^{-\zeta_{k-1} K(w)} \; \xi_r(w)dw] = 0$$

for $k = 1,\ldots,n$

where the path for the first integral is represented by Fig. 24 , and for the second integral is a closed path about μ .

We have then (5n-3) linear equations for the (5n-1) quantities $c_o,\ldots,c_{5n-2}$ in terms of the complex number α , which describes the behavior of $\chi(z)$ at $x = -\infty$. We can still prescribe the strength of the energy sinks at the two corners of Γ at the origin. This amounts to prescribing the values of c_o and c_{5n-2}, the vanishing of which indicates the absence of logarithmic singularities of χ at those corners. Assuming c_o and c_{5n-2} to be prescribed, we then have 5n-3 equations of the general form

$$(6.28) \quad L_i(c_1,\ldots,c_{5n-3}) = M_i(c_o,c_{5n-2},\beta,\gamma)$$

$$\text{for } i = 1,\ldots,5n-3,$$

where the L_i and M_i are homogeneous linear functions of their respective arguments, and where we put

$$\beta = R(\alpha) \quad , \quad \gamma = Im(\alpha) \ .$$

We shall not prove here that the equations (6.28) are linearly independent and hence have a unique solution, but we shall prove the corresponding property for a derived system of equations, that takes into account the time dependence of the function Φ .

Under the assumptions made in section 1 the velocity potential of the motion of the liquid is of the form

$$\Phi(x,y,t) = \varphi'(x,y)\cos t + \varphi''(x,y)\sin t \ ,$$

where

$$\varphi'(x,y) = R(\chi'(x+iy)), \quad \varphi''(x,y) = R(\chi''(x+iy))$$

and the function χ' and χ'' separately satisfy all the conditions imposed above on $\chi(z)$. (Here the symbols χ' and χ'' are used to denote independent functions and are not to be confused with derivatives of a function χ.) If we denote by c_k', β', γ' and c_k'', β'', γ'' respectively the coefficients c_k entering the expressions for χ' and χ'', we have the 10n-6 equations

$$(6.29) \qquad \begin{aligned} L_i(c_1', \ldots, c_{5n-3}') &= M_i(c_o', c_{5n-2}', \beta', \gamma') \\ L_i(c_1'', \ldots, c_{5n-3}'') &= M_i(c_o'', c_{5n-2}'', \beta'', \gamma'') \end{aligned}$$

$$i = 1, \ldots, 5n-3 .$$

By definition (4.4) the complex quantity $\sigma_n C_n$ is a linear combination of the coefficients $c_o, \ldots, c_{5n-2}$. Putting $\sigma_n' C_n' = \sigma' + i\tau'$, $\sigma_n'' C_n'' = \sigma'' + i\tau''$ we have relations of the form

$$(6.30) \qquad \begin{aligned} \sigma' &= L_{5n-2}(c_o', \ldots, c_{5n-2}'), \quad \tau' = L_{5n-1}(c_o', \ldots, c_{5n-2}') \\ \tau'' &= L_{5n-2}(c_o'', \ldots, c_{5n-2}''), \quad \tau'' = L_{5n-1}(c_o'', \ldots, c_{5n-2}'') . \end{aligned}$$

At $x = -\infty$, $y = 0$ $\varphi(x,y,t)$ is asymptotically of the form

$$\Phi(x,y,t) = A \cos(x+t) + B \sin(x+t) + C \cos(x-t) + D \sin(x-t)$$

and at $x = +\infty$, $y = 0$ of the form

$$\varphi(x,y,t) = A'\cos(x+t) + B'\sin(x+t) + C'\cos(x-t) + D'\sin(x-t) .$$

Here according to (5.18), (5.19)

$$(6.31) \qquad \begin{aligned} C &= \frac{\beta'+\gamma''}{2} , & D &= \frac{\gamma'-\beta''}{2} \\ A' &= \frac{\beta'-\gamma''+\sigma'-\tau''}{2} , & B' &= \frac{\beta'+\gamma''+\sigma'+\tau''}{2} \end{aligned}$$

Prescribing the values of $c_o, c_{5n-2}, C, D, A', B'$ we have in (6.29), (6.30), (6.31) 10n+2 equations for the 10n+2 unknown quantities

$$c_1', \ldots, c_{5n-3}', c_1'', \ldots, c_{5n-3}'', \beta', \gamma', \sigma', \tau', \beta'', \gamma'', \sigma'', \tau'' .$$

If it can be shown, that the corresponding homogeneous equations have only the trivial solution, then the inhomogeneous system will always have a unique solution. Thus there will exist a unique motion of the water in the presence of the barrier with energy sinks of prescribed strength at the two points where the barrier enters the water, and corresponding to any waves coming in from infinity on either side.

A solution of the homogeneous equations now corresponds to a state where $c_o', c_o'', c_{5n-2}', c_{5n-2}'', A'$, B', C, D vanish. For such a motion then no logarithmic singularities of Φ exist (i.e. $\iint (\varphi_x^2 + \varphi_y^2)dxdy$ is integrable over any finite region), and no waves come in from infinity from either side. We have seen in section 1 that then also A, B, C', D' vanish, and hence $\varphi'(x,y)$ and $\varphi''(x,y)$ vanish at infinity. We shall prove in the next section that then φ_1 and φ_2

vanish identically. This will then complete the proof of existence and uniqueness of a solution of our problem for given strength of sinks and for given incoming waves. The solution can be found explicitly by solving the 10n+2 linear equations indicated above.

It does not follow from this argument that instead of the two incoming waves one could prescribe the incoming and reflected wave on one side at infinity, or that there exists necessarily a standing wave of given behavior at $x = -\infty$.

7. A uniqueness theorem.

Theorem: If in addition to the conditions imposed before the function $\chi(z)$ is bounded everywhere in Γ and vanishes both for $x \to +\infty$ and $x \to -\infty$, and if $\lim_{z \to 0} z\,\chi'(z) = 0$, then $\chi(z)$ is constant. (It is easily seen that the assumptions of this theorem are satisfied, if $\varphi(x,y) = R(\chi)$ vanishes at infinity in Γ, and if $\varphi(x,y)$ is bounded near 0.)

Proof: The assumption that $\chi(z)$ vanishes for $x = +\infty$ and $x = -\infty$ implies, according to (5.18), (5.19) that

$$(7.1) \qquad \alpha = 0 \ , \ C_n = 0 \ .$$

Then, in conjunction with (6.25), (4.7) it is seen that all C_k vanish for $k = 0,\ldots,n$. Lemma I on p. 44 then guarantees that the functions $H_\mu(z)$ for $\mu = 0,\ldots,n$ are regular at infinity. The same holds then for the transformed functions $P_\mu(z)$ at the point B_o. Using (7.1), (6.24), 6.20) we have

$$(7.2) \qquad P_k(w) = \varepsilon^2 P_{k-1}(\varepsilon^2 w) \quad \text{for} \quad k = 1,\ldots,n$$

for w in $T_o + T_1$. From (6.19) we have

$$(7.3) \qquad P_\mu(w) = \overline{P_{n-\mu}(\bar{w})} \quad \text{for} \quad \mu = 0,\ldots,n \ .$$

As $P_o(w),\ldots,P_n(w)$ are regular at $w = B_o$, it follows from (7.2), that $P_1(w),\ldots,P_n(w)$ are regular at B_1, and that $P_o(w),\ldots,P_{n-1}(w)$ are regular at B_{2n-1}. Then from (7.3) $P_o(w),\ldots,P_n(w)$ are regular both at B_1 and B_{2n-1}, and in particular have no branchpoints there.

Continuing this argument we find that $P_o(w),\ldots,P_n(w)$ are regular at all points B_r.

It is known already that the functions $P_\mu(w)$ are univalued and hence behave rationally near the points A_r. The new assumption that

$$\lim_{z \to 0} z\,\chi'(z) = 0$$

implies that

$$\lim_{z \to 0} z^{2n} F(z) = 0 .$$

Then $G(w)$ has at most a pole of order $2n(2n-1)-1$ at $w = 0$ and a pole of order at most $2n-1$ at $w = \infty$. It follows that in the expansion (1.29) of $G(w)$ the coefficients c_o and c_{5n-2} vanish. The vanishing of c_{5n-2} has as a consequence that $G(w)$ is bounded at infinity. Then the integrands in (6.11) are of the order $O(\frac{1}{v^2})$, and consequently the functions $P_k(w)$ are regular at $w = \infty$. As those functions are univalued at all A_r, B_r, ∞ they have no branchpoint at $w = 0$ either. As they then behave rationally at all possible singular points, the $P_k(w)$ are rational functions. The functions $p_k(w)$ were seen already to be rational. Thus χ, which is a linear combination of those functions is a rational function of w. As χ is bounded in Γ it follows that χ is bounded in T_o, and hence has no poles at $w = 0, \infty, A_o, B_o$.

The function $K'(w)$ has a simple zero at each A_r. It follows that whenever χ as a function of w is regular at a point A_r, then the two expressions

$$(7.4) \qquad \varepsilon\chi' = \varepsilon \frac{1}{K'(w)} \frac{d\chi}{dw} \quad \text{and} \quad f = \chi' + i\chi$$

have at most poles of first order at that A_r. Inversely, whenever one of the two expressions (7.4) has a pole of first order at a point A_r, then χ is regular at that point. Now $\varepsilon\chi'$ is real along the line $0, A_0, \infty$, and hence has the same behavior at the points A_r and A_{2n-r}. It follows that if χ is regular at A_r, then also at A_{2n-r}. Similarly the function $f = \chi' + i\chi$ is real along the positive real w-axis, and hence has the same behavior at the points A_r and A_{2n-r-1}. Hence, if χ is regular at A_r, it is regular at A_{2n-r-1}. Hence, as χ is regular at A_0, it is regular at all A_r. It follows that the rational function χ has no poles at all in the w-plane, and hence is a constant. This completes the proof of the theorem.

BIBLIOGRAPHY

[1] Ursell, F., "The Effect of a Vertical Barrier on Waves in Deep Water", Admiralty Research Laboratory, Teddington, Middlesex, A.R.L./103.41/R2/W.

[2] Stoker, J. J., "Surface Waves in Water of Variable Depth". Quart. App. Math., Vol. 5, No. 1, pp. 1-54, 1947.

Date Due

PRINTED IN U. S. A.

NYU
IMM-
163 John.
Waves in the pr

NYU
IMM-

NYU
IMM-
163 John.
AUTHOR
Waves in the presence of an
TITLE
inclined barrier.

DATE DUE	BORROWER'S NAME	ROOM NUMBER
	Wolchard	

N. Y. U. Institute of Mathematical Sciences
25 Waverly Place
New York 3, N. Y.